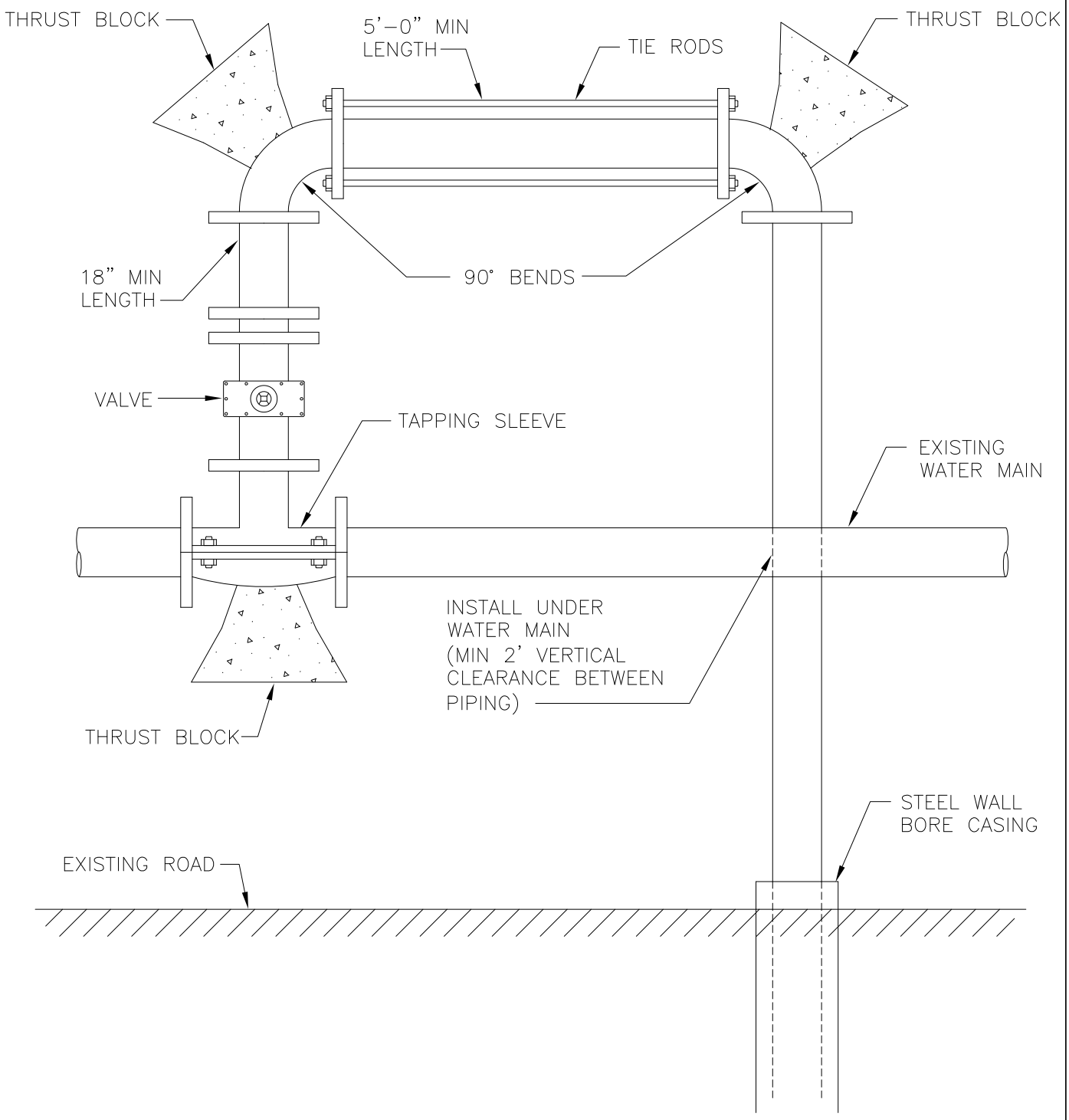

REVISION NO.	DATE	BY	CHKD

WSACC

WATER AND SEWER AUTHORITY OF CABARRUS COUNTY

BACKSIDE TAP

FILE NAME: W12.0

DATE: 8/06