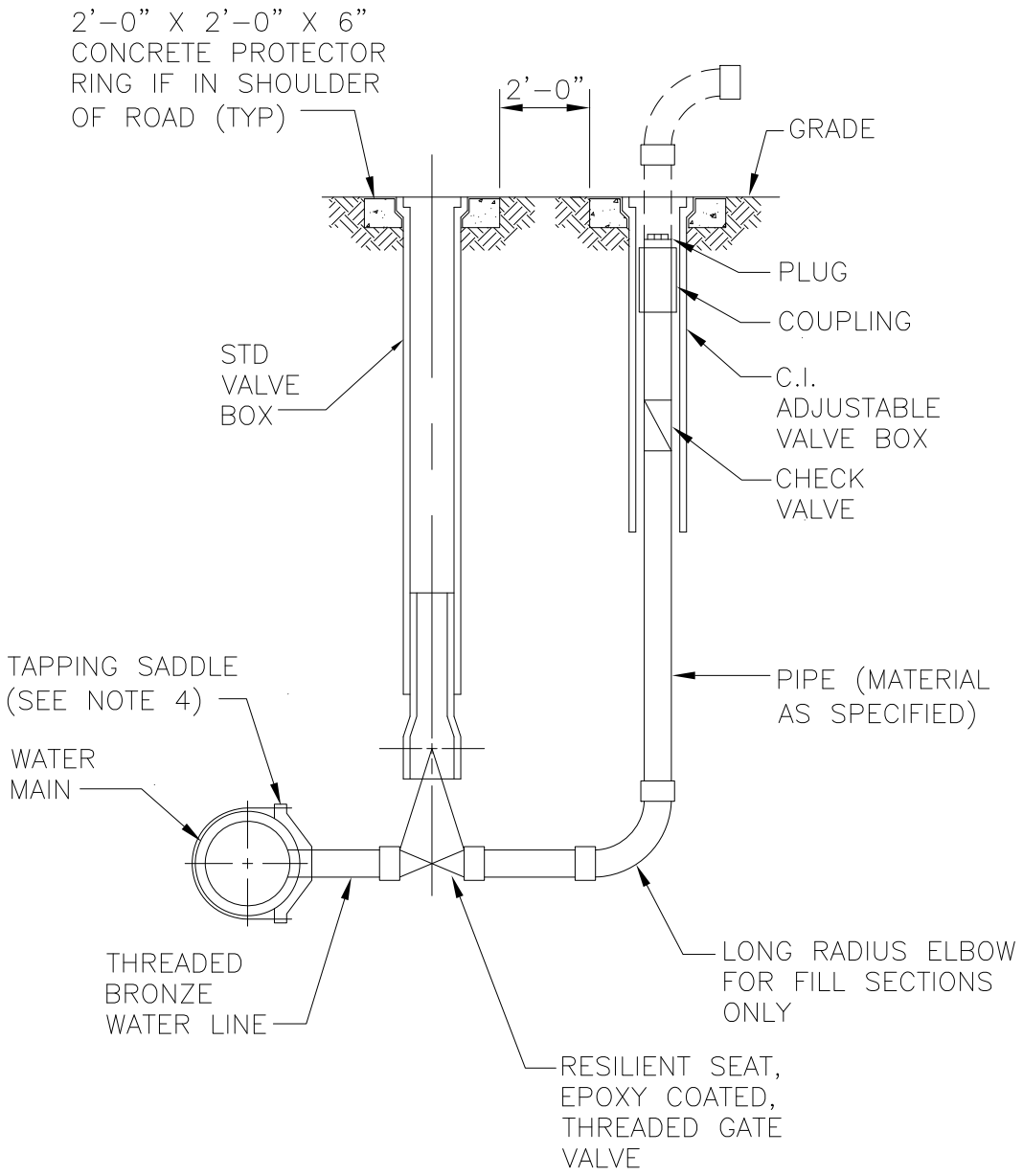

NOTES:

1. INSTALL 2" BLOW-OFF ON 6" THRU 20" MAINS
2. INSTALL 4" BLOW-OFF ON 24" OR LARGER MAINS.
3. VALVE BOX CONCRETE PAD SHALL BE 24" SQUARE 8" MINIMUM FROM EDGE OF VALVE BOX LID TO EDGE OF CONCRETE PAD.
4. ADD CORPORATION STOP IF MAKING WET TAP.

REVISION NO.	DATE	BY	CHKD

WSACC

WATER AND SEWER AUTHORITY OF CABARRUS COUNTY

BLOW-OFF DETAIL

FILE NAME: W9.0

DATE: 8/06