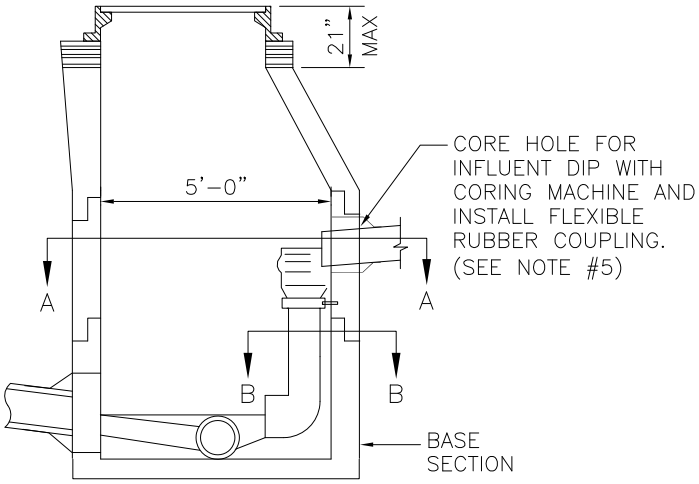

ELEVATION

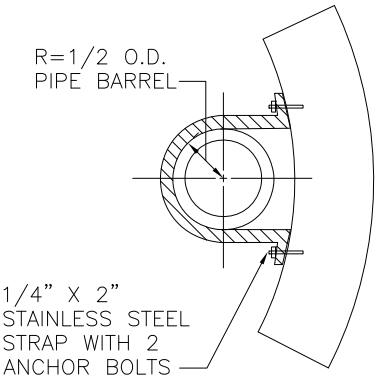

SECTION B-B

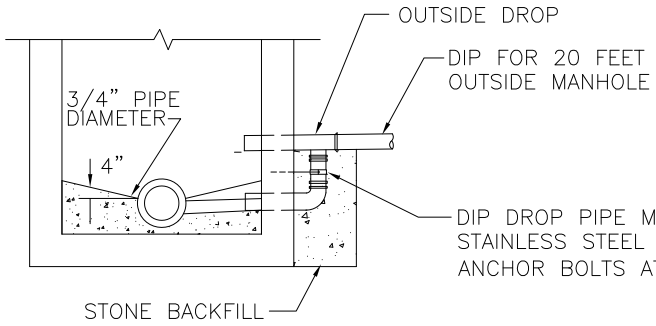

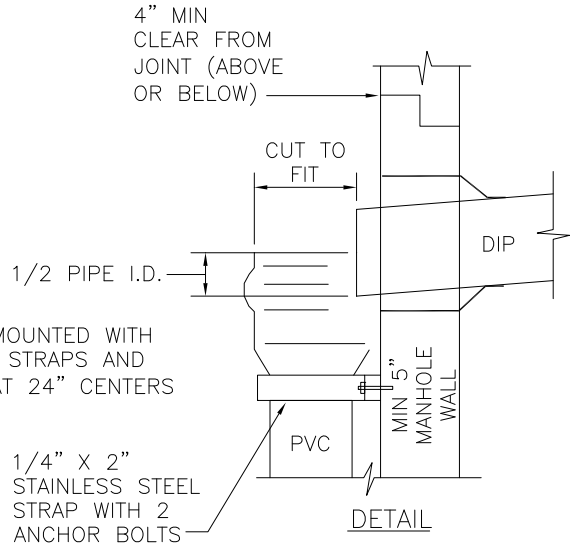

DETAIL

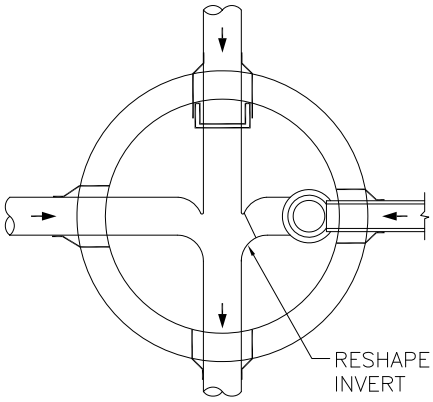

SECTION A-A

1. PIPE FOR INSIDE DROP SHALL BE 35 PVC CONFORMING TO ASTM SPECIFICATION D3034.
2. BOTTOM BEND TO BE 90° SHORT BEND, BELLSPIGOT, OF SDR 35 PVC. SPIGOT OF BEND TO REST DIRECTLY ON EXISTING SHELF. CONSTRUCT MASONRY TROUGH FROM DROP EFFLUENT TO MAIN CHANNEL.
3. NOTCH BELL OF PVC DROP TO ACCEPT DIP SPIGOT AS SHOWN.
4. LOCATE STRAPS AT PIPE BELL AND ABOVE BELL OF 90° BEND AS SHOWN. ADD EXTRA STRAPS AS NECESSARY TO MAINTAIN MAXIMUM SPACING OF TEN FEET.
5. HOLE IN MANHOLE WALL TO BE MADE WITH A CORING MACHINE. INSTALL FLEXIBLE RUBBER COUPLING.
6. CORE HOLE SHALL NOT ENTER CONE SECTION.
7. STEPS SHALL BE RELOCATED IF THEY CONFLICT WITH INSIDE DROP.
8. A DROP MANHOLE SHALL BE REQUIRED WHEN DIM. "A" EXCEEDS 24" EXCEPT WHEN THE INLET PIPE INVERT LIES WITHIN THE LOWER HALF OF THE OUTLET PIPE. SEE FIGURE S2.0 FOR STANDARD MANHOLE.

REVISION NO.	DATE	BY	CHKD

WSACC

WATER AND SEWER AUTHORITY OF CABARRUS COUNTY

STANDARD DROP MANHOLE DETAIL

FILE NAME: S4.0

DATE: 8/06