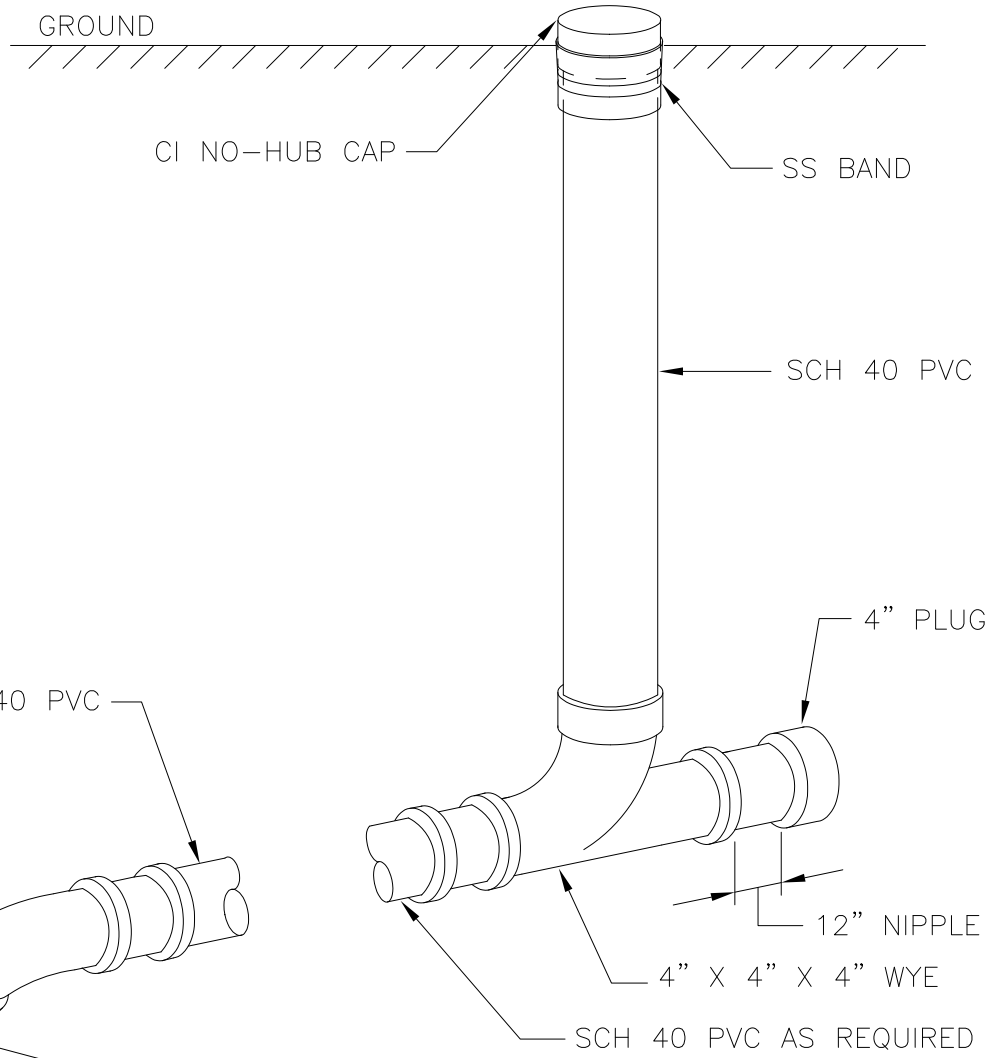

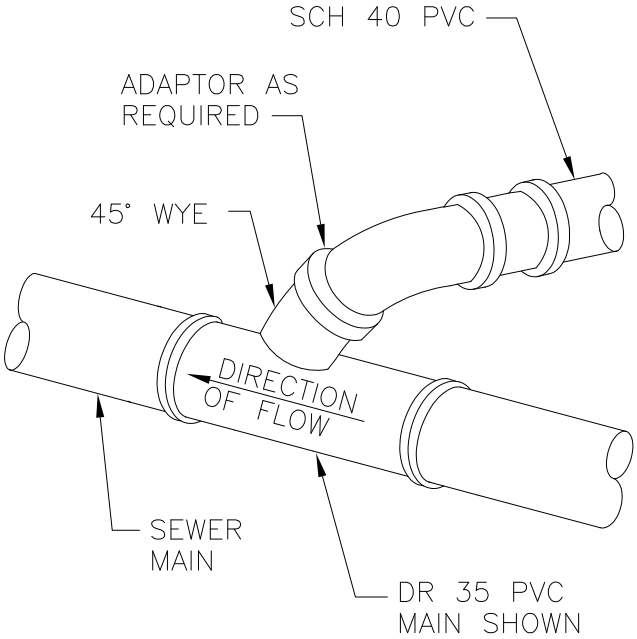

NOTES:

1. THE LATERAL SHALL BE A MINIMUM OF 5'-0" BELOW THE EDGE OF PAVEMENT, EXCEPT WHERE DEPTH OF SEWER MAIN WILL NOT PERMIT.

2. 4" SEWER LATERAL – MINIMUM GRADE 1.0%

REVISION NO.	DATE	BY	CHKD

WSACC

WATER AND SEWER AUTHORITY OF CABARRUS COUNTY

TYPICAL SEWER LATERAL

FILE NAME: S1.0

DATE: 8/06