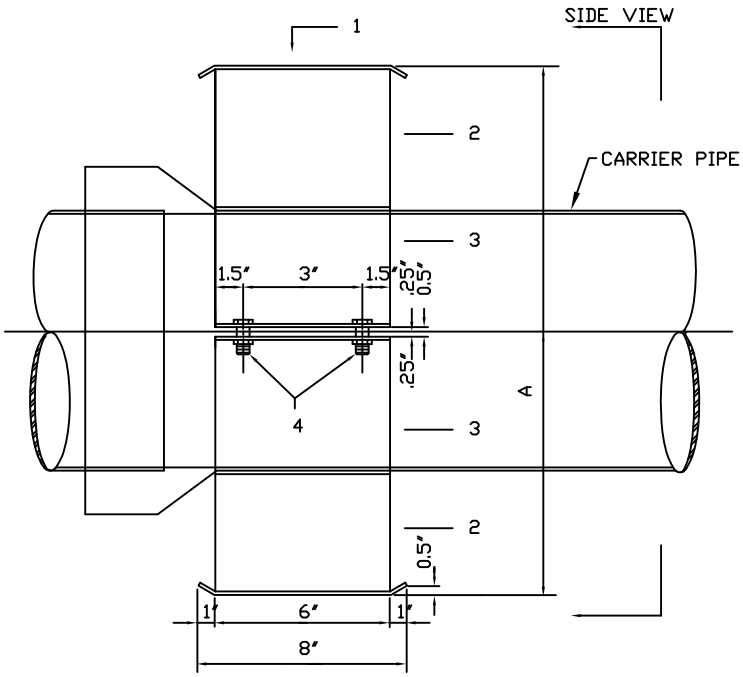

LEGS ROTATED OUT OF POSITION FOR CLARITY

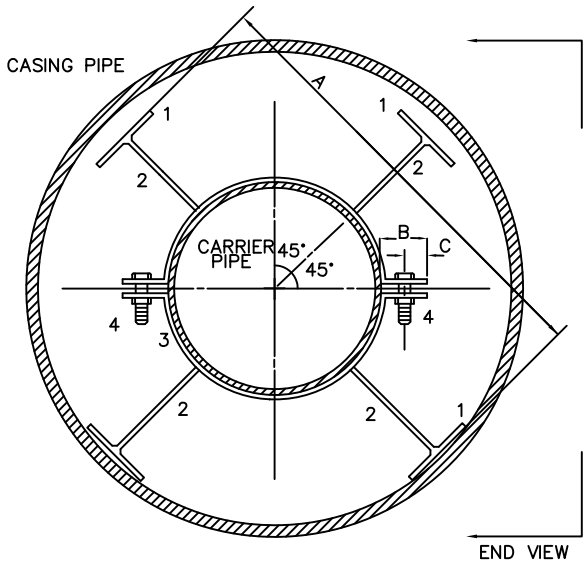

CARRIER PIPE		SPIDER DIMENSIONS		
NOMINAL DIA.	O. D.	A	B	C
6"	6.90"	11"	1 1/4"	5/8"
8"	9.05"	16 1/2"	2 1/4"	1"
12"	13.20"	22 1/2"	3"	1 1/4"
16"	17.40"	28 1/2"	3 1/2"	1 1/2"
24"	25.80"	34 1/4"	4"	2"

	PIPE SUPPORT ASSEMBLY MARK NUMBER			
NOMINAL DIA.	1	2	3	4
6"	8" x 2" x 1/4" PL	6" x 1 1/2" x 1/4"PL	6" x 1/4"PL	3/8" NUT & BOLT
8"	8" x 3" x 1/4" PL	6" x 3 1/4" x 1/4"PL	6" x 1/4"PL	1/2" NUT & BOLT
12"	8" x 4" x 1/4" PL	6" x 3 5/8" x 3/8"PL	6" x 3/8"PL	1/2" NUT & BOLT
16"	8" x 4" x 3/8" PL	6" x 4 3/4" x 3/8"PL	6" x 3/8"PL	1/2" NUT & BOLT
24"	8" x 4" x 3/8" PL	6" x 5 1/2" x 3/8"PL	6" x 3/8"PL	1/2" NUT & BOLT

NOTES:

1. SEE WSACC SPEC 02240 FOR REQUIRED CASING DIAMETER AND MINIMUM THICKNESS.

2. CARRIER PIPE IS RESTRAINED PUSH-ON JOINT DIP, PROVIDE TWO SPIDERS PER JOINT OF CARRIER PIPE.

3. SPIDERS, NUTS, BOLTS & WASHERS SHALL BE STAINLESS STEEL.

4. ADJUST HEIGHT OF SPIDERS AS NECESSARY TO MAINTAIN SPECIFIED SLOPE.

5. CASING PIPE MATERIAL IS STEEL.

REVISION NO.	DATE	BY	CHKD
1	09/08	BY	MAL

WSACC

WATER AND SEWER AUTHORITY OF CABARRUS COUNTY

CASING SPIDER

FILE NAME: M2.0

DATE: 09/08