TABLE OF EMBEDMENT DEPTHS BELOW PIPE

D	a MIN SOIL	a MIN ROCK
27" & SMALLER	6"	6"
30" TO 60"	6"	9"
66" & LARGER	6"	12"

NOTES:

1. GRANULAR EMBEDMENT MATERIAL SHALL BE CRUSHED ROCK, PEA GRAVEL COARSE AGGREGATE SIZE NUMBER 57. EMBEDMENT MATERIAL SHALL BE PLACED IN LAYERS NOT MORE THAN 6" DEEP AND COMPACTED AS SPECIFIED.
2. HAND PLACED EMBEDMENT SHALL BE COMPACTED FINELY DIVIDED MATERIAL FREE FROM DEBRIS AND STONES.
3. EMBEDMENT ABOVE THE TOP OF THE PIPE SHALL BE AN UNCOMPACTED LAYER FOR ALL INSTALLATIONS.
4. REFER TO SPECIFICATIONS FOR GEOTECHNICAL FABRIC OR SPECIAL EMBEDMENT REQUIREMENTS FOR TRENCHES IN FINE SOILS EXTENDING BELOW GROUNDWATER LEVEL.
5. TRENCH OUTLINES DO NOT INDICATE ACTUAL TRENCH EXCAVATION SHAPE, SOIL CONDITIONS, OR PRESENCE OF SHEETING LEFT IN PLACE. EMBEDMENT MATERIAL SHALL EXTEND THE FULL WIDTH OF THE ACTUAL TRENCH EXCAVATION.

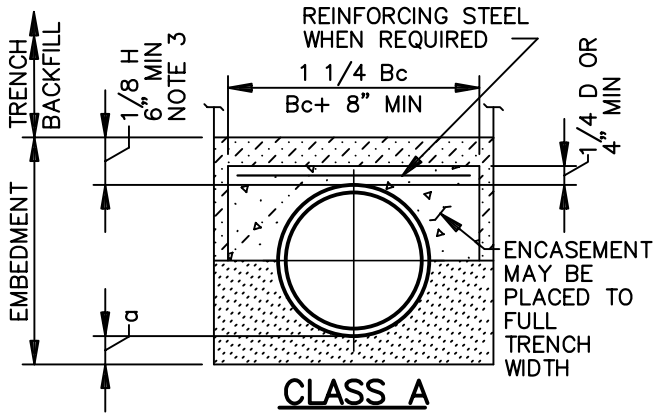

CLASS A
ARCH ENCASEMENT

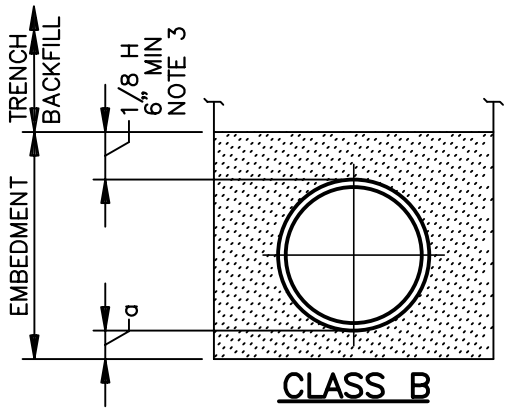

CLASS B

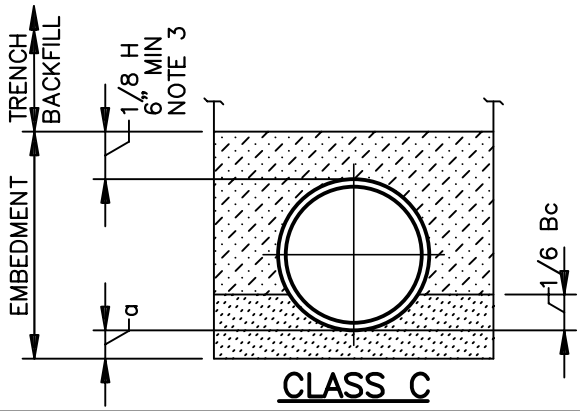

CLASS C

LEGEND

Bc	OUTSIDE DIAMETER OF PIPE
H	COVER ABOVE TOP OF PIPE
D	NOMINAL PIPE SIZE
a	EMBEDMENT BELOW PIPE (SEE TABLE)

HAND PLACED EMBEDMENT

GRANULAR EMBEDMENT

CONCRETE

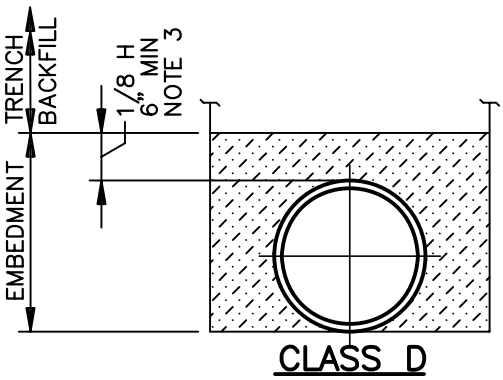

CLASS D

REVISION NO.	DATE	BY	CHKD

WSACC
WATER AND SEWER AUTHORITY OF CABARRUS COUNTY

EMBEDMENTS FOR MAINS

FILE NAME: WS 1.0 DATE: 8/06