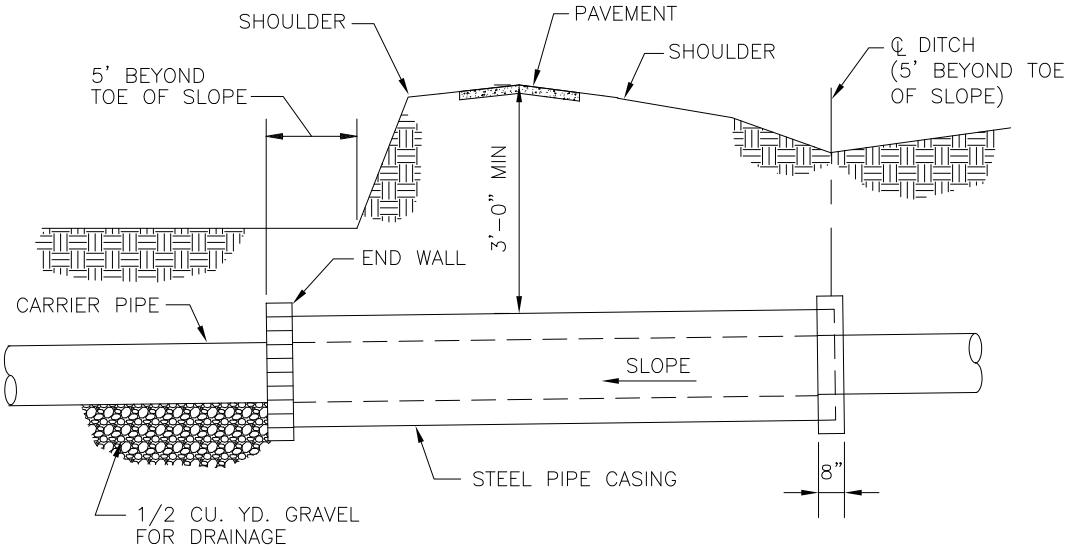

TYPICAL PIPE CROSSING UNDER HIGHWAYS

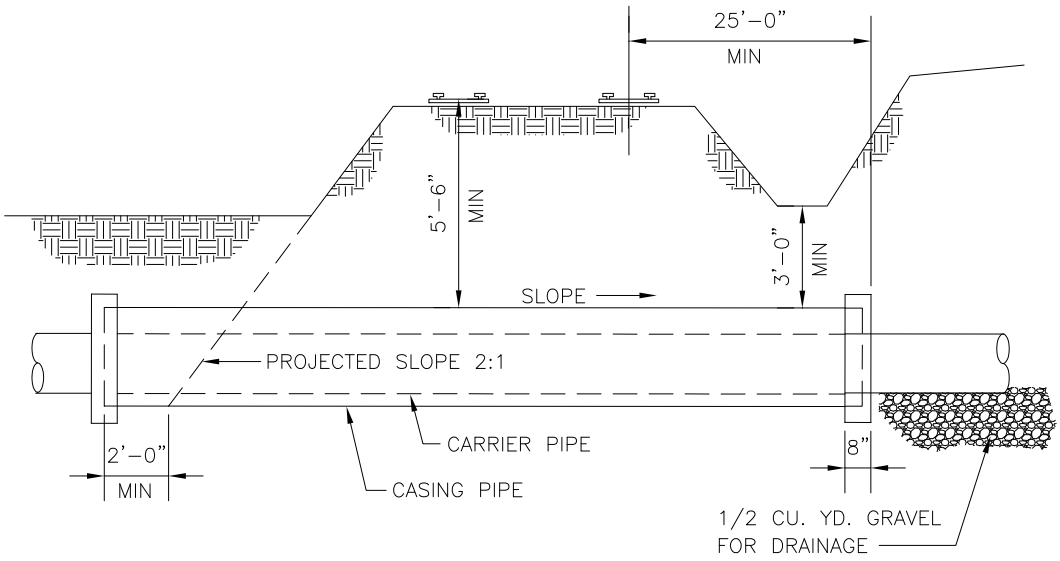

TYPICAL PIPE CROSSING UNDER RAILROADS

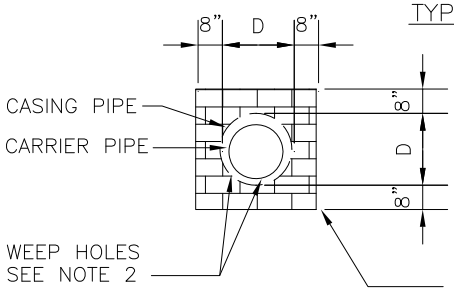

END WALL SECTION

COMMON BRICK MORTAR:
1 PART PORTLAND CEMENT
2 PARTS SAND
D = DIAMETER OF CASING PIPE

NOTES:

1. SEE DRAWINGS FOR LOCATION, SIZE AND LENGTH OF STEEL PIPE CASINGS.
2. INSTALL TWO(2) 1" DRAINS EACH SIDE OF CARRIER PIPE IN DOWNHILL END WALL.

REVISION NO.	DATE	BY	CHKD

WSACC

WATER AND SEWER AUTHORITY OF CABARRUS COUNTY

ENCASEMENT PIPE UNDER HIGHWAYS AND RAILROADS

FILE NAME: M1.0

DATE: 8/06