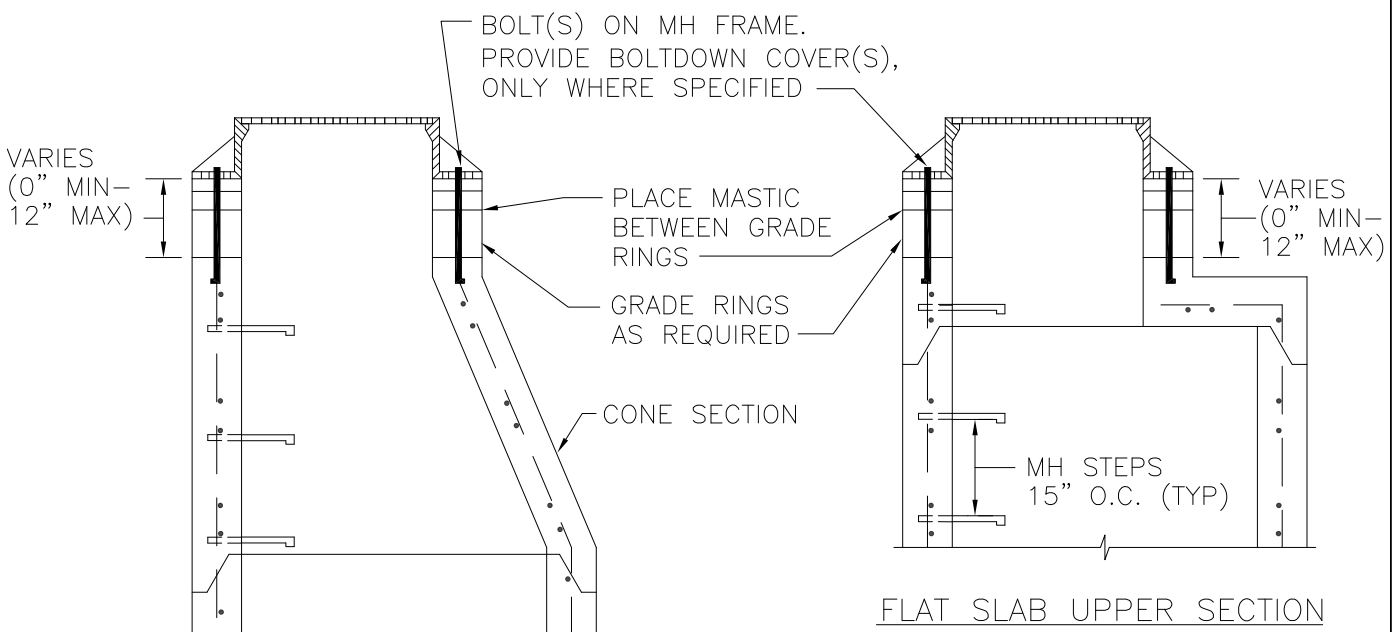

FLAT SLAB UPPER SECTION

ALLOWED ONLY WHERE DEPTHS WILL NOT PERMIT CONE SECTIONS

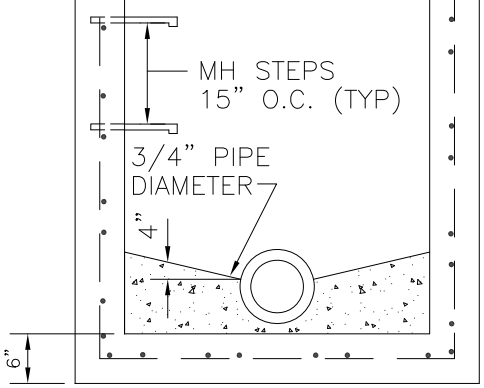

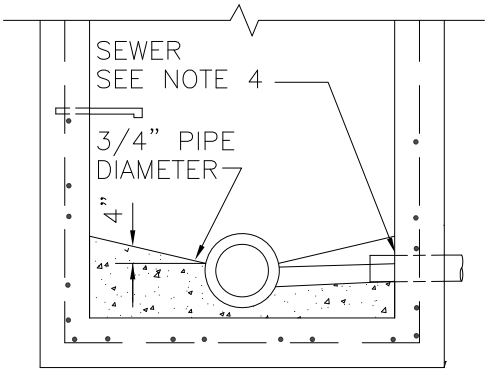

NOTES:

1. MANHOLE RISERS AND CONE SECTIONS SHALL CONFORM TO ASTM C–478, LATEST REVISION.
2. TRANSITION RINGS SHALL HAVE A MINIMUM CLEARANCE OF 2'–0" ABOVE THE EFFLUENT OVERT ELEVATION.
3. SEE FIGURE S4.0 FOR DROP MANHOLE.
4. FLEXIBLE WATERTIGHT, SYNTHETIC RUBBER SLEEVES, WITH STAINLESS STEEL CLAMP; DRAW BOLT AND NUT; OR CAST–IN SLEEVE; OR "A" LOCK CONNECTION SHALL BE FURNISHED FOR EACH PIPE TO MANHOLE CONNECTION.
5. SEE SPECIFICATIONS FOR MANHOLE DIAMETER.
6. MAXIMUM HEIGHT OF GRADE ADJUSTMENT RINGS SHALL NOT EXCEED 12".

REVISION NO.	DATE	BY	CHKD

WSACC

WATER AND SEWER AUTHORITY OF CABARRUS COUNTY

STANDARD PRECAST CONCRETE MANHOLE

FILE NAME: S2.0

DATE: 8/06