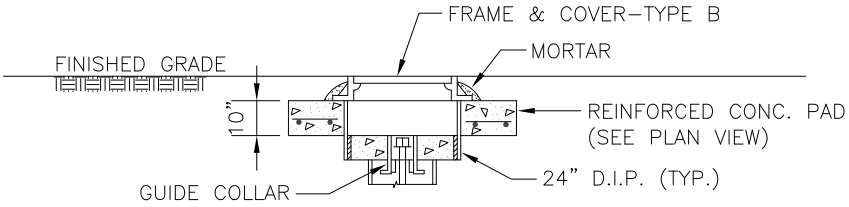

METHOD B

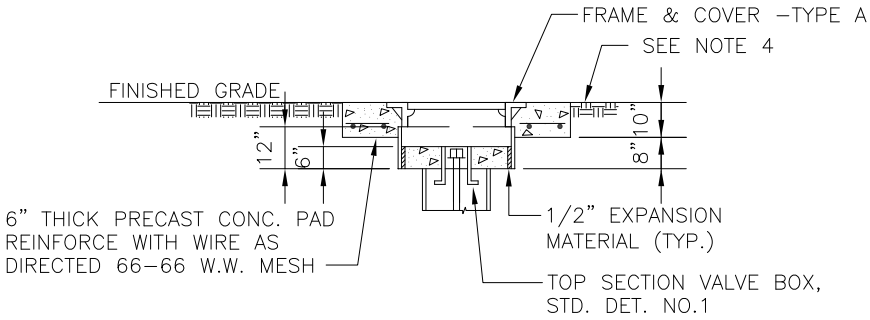

METHOD A

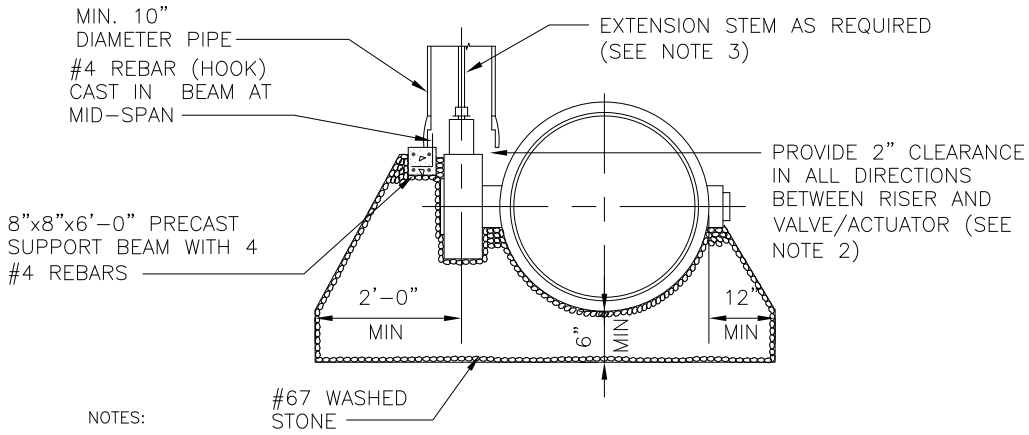

NOTES:

1. METHOD B SHALL BE USED IN PAVED AREAS AND METHOD A SHALL BE USED IN NONPAVED AREAS.
2. DIAMETER OF RISER MAY VARY AS REQUIRED BY VALVE ACTUATOR.
3. WHEN OPERATING NUT DEPTH EXCEEDS 4'–0" BELOW FINISHED GRADE, PROVIDE EXTENSION STEM WITH STD. 2" SQUARE OPERATING NUT IN TOP SECTION OF VALVE BOX, EXTENSION STEM SHALL BE SIZED AS RECOMMENDED BY THE VALVE MANUFACTURER.
4. PROVIDE PRECAST PROTECTOR RING IF IN SHOULDER OF ROAD.

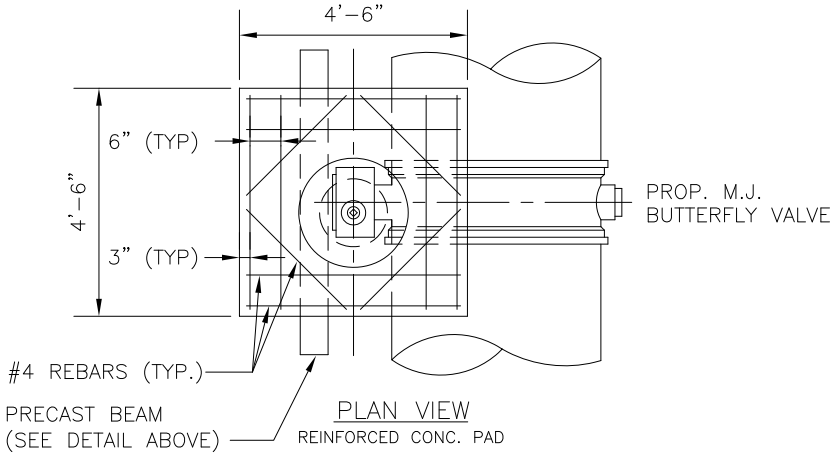

PLAN VIEW
REINFORCED CONC. PAD

REVISION NO.	DATE	BY	CHKD

WSACC
WATER AND SEWER AUTHORITY OF CABARRUS COUNTY

DIRECT BURY BUTTERFLY VALVE INSTALLATION

FILE NAME: W5.0 DATE: 8/06