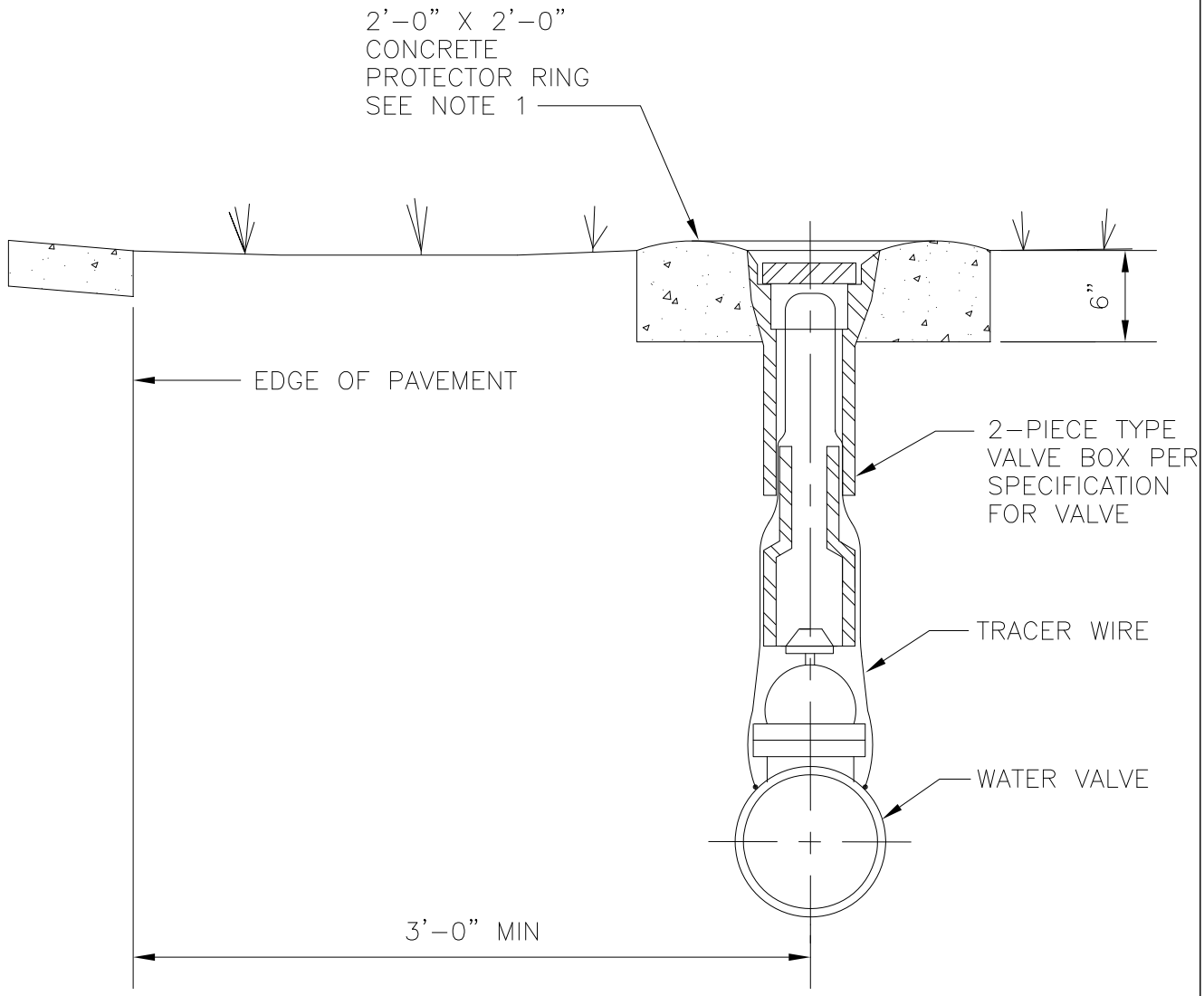

NOTE:

1. USE PROTECTION RING IN SHOULDER OF ROAD.

REVISION NO.	DATE	BY	CHKD

WSACC

WATER AND SEWER AUTHORITY
OF CABARRUS COUNTY

VALVE BOX INSTALLATION

FILE NAME: W1.0

DATE: 8/06