Standard Form of Request for Qualifications

This **REQUEST FOR QUALIFICATIONS** ("RFQ") from the Owner named below invites the submittal of a Statement of Qualifications ("SOQ") from firms interested in providing design-build services for the Project described below. By submitting an SOQ, the Offeror represents that it has carefully read the terms and conditions of this RFQ and all attachments and Addenda and agrees to be bound by them. This RFQ is not an offer to enter into a contract, but merely a solicitation of persons interested in submitting an SOQ to the Owner for the Project.

OWNER:
Water and Sewer Authority of Cabarrus County
232 Davidson Highway
Concord, North Carolina, 28027

PROJECT:
Professional Services for the Progressive Design-Build of the Mt. Pleasant Force Main and Sanitary Sewer Replacement

OWNER CONTACT PERSON:
Offerors shall submit the SOQ to

Thomas Hahn, PE
232 Davidson Highway
Concord, North Carolina 28027
704.786.1783 ext. 228
t.hahn@wsacc.org

SOQ DUE DATE AND TIME
Offeror's SOQ shall be submitted no later than: 2:00 PM, March 24, 2026

Submit four (4) printed copies and one USB with the SOQ in PDF format in a sealed envelope.

All SOQs must be submitted pursuant to the instructions below. It is the Offeror's sole responsibility to ensure that the SOQ is delivered in the manner required by this RFQ by the Due Date and Time. WSACC has the right to reject any SOQs not properly delivered.

© 2017 Design-Build Institute of America

SECTION 1: OWNER DESCRIPTION

1.1 General

The Water and Sewer Authority of Cabarrus County (WSACC) provides wastewater transportation and treatment service to its member jurisdictions within Cabarrus County and Charlotte Water. WSACC provides bulk collection of wastewater from the City of Concord, City of Kannapolis, Town of Harrisburg, Town of Mount Pleasant, and Town of Midland area, as well as from portions of Charlotte Water's service area through connections at the Mecklenburg County line. WSACC owns and operates 127 miles of wastewater collection system gravity lines, six pump stations and 21 miles of force main, and two wastewater treatment plants: the Rocky River Regional Wastewater Treatment Plant (RRRWWTP) and the Muddy Creek Wastewater Treatment Plant (MCWWTP). The RRRWWTP is currently permitted for a monthly average flow up to 30.0 million gallons per day (MGD). The MCWWTP is located south of Midland and has a permitted capacity of 300,000 gallons per day (gpd). Each of the member jurisdictions and Charlotte Water operates as an independent utility, but is a direct customer to WSACC, who transports their wastewater to its WWTP facilities for treatment.

1.2 Funding/Authority

WSACC will establish a Capital Project Fund for the project with sufficient funds allocated for the project. Funding is anticipated to come from WSACC System Development Fees. Funding for this project will need approval from the WSACC Board of Directors after selection of preferred Design-Build Offeror and prior to commencement of professional services.

SECTION 2: OVERVIEW OF PROJECT

2.1 General

An existing 8-inch force main runs from the WSACC Mt. Pleasant Pump Station No. 1 to No. 2, and from Mt. Pleasant Pump Station No. 2 to the intersection of Cold Springs Road and Highway 49. The project will include replacement of approximately 23,700 feet of force main and 200 feet of gravity sewer in the referenced areas with larger diameter line along a revised alignment, with the approximate extents of the project shown in Figure 1. The larger force main is preliminarily sized as 16-inch diameter from previous modeling efforts, and, after selection of a design-build team for this effort, the design-build team for this project should conduct additional flow monitoring, hydraulic modeling, etc., as needed to verify the force main diameter and suitability for the range of expected flow conditions described later in this RFQ. Implementation of this project will allow the existing pump stations to convey additional flow to accommodate peak flows and projected growth in the areas which contribute wastewater to these two pump stations. The original construction drawings for Coldwater Creek Interceptor Sewer, Dutch Buffalo Creek Interceptor Sewer, and Pump Stations & Force Mains are shown in Exhibit A. Record drawings for the (1) Improvements to Mt. Pleasant Pumping Station No. 1 and No. 2, and (2) Mt. Pleasant Northwest Sewer Extension are shown in Exhibit B and C, respectively.

© 2017 Design-Build Institute of America

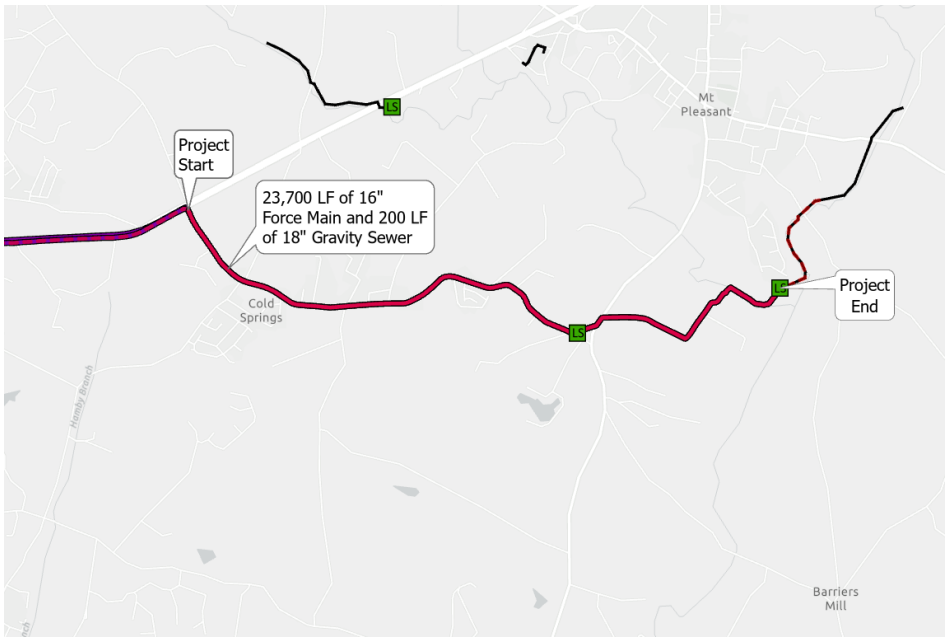

Figure 1 - Mt. Pleasant Force Main Replacement Project

2.2 Project Objectives

- Establish a collaborative relationship between WSACC and the Design-Build Team to deliver high-quality design and construction on time and within WSACC's budget.
- Maintain a safe, injury free work site.
- Facilitate early communication among WSACC and the design-build team on selecting the alignment for the new force main, with a goal of securing the corresponding easements/agreements so the project can be built efficiently and the force main can be more easily maintained into the future.

2.3 Scope of Work

Per the 2022 Master Plan effort by Black & Veatch, the project is currently anticipated to include approximately 23,700 feet of 16-inch force main and 200 feet of 18-inch gravity sewer, as seen in Figure 1. The selected design-build team will need to confirm the force main and gravity sewer diameter(s) and overall length of force main and gravity sewer needed for the project, along with confirming compatibility of the existing pumps and related features with the design goals for the project. WSACC desires for the replacement force main and gravity sewer to be sized by the design-builder to allow the replacement force main and gravity sewer to convey projected flows through 2050. Additional upgrades to the Mt. Pleasant Pump Stations 1 and 2 are anticipated as part of a (separate) future project. The selected design-build team will need to verify whether the existing pumps at Mt. Pleasant Pump Stations 1 and 2 can continue to operate with the larger replacement force main and gravity sewer, to model the additional capacity available with the larger replacement force main and gravity sewer diameter(s), alignment, and other relevant factors, and to confirm that the replacement force main and gravity sewer sizing will be sufficient for conveying a peak flow up to 4.25 MGD following the referenced future pump station upgrades. This project is anticipated to include five road crossings: Mt Pleasant Rd S, Barnhardt Rd, Joe Bost Rd, Cold Springs Rd S, and Boyington Ct.

The project scope includes, but is not limited to:

(1) Analysis of previous evaluations and conclusions
(2) Any additional field testing
(3) Development of force main and gravity sewer sizing and alignment, along with plans and specifications for the force main and gravity sewer replacement and interconnections with existing force mains and pump stations as needed
(4) Securing required easements/agreements and required permits
(5) Construction and commissioning

© 2017 Design-Build Institute of America

2.4 Estimated Budget

The estimated budget for the Scope of Work referenced in Section 2.3 is currently $10,495,000. Estimated costs are informational only and do not constitute a binding project budget.

2.5 Project Performance Requirements

See Exhibit D for the Project's Performance Requirements. Exhibit D outlines anticipated Project Performance Requirements for the Progressive Design-Build Contract, provided solely for reference and transparency regarding Phase 1 and Phase 2 expectations after selection. These requirements do not require Offerors to submit technical concepts or design solutions during the RFQ phase, as they will be collaboratively refined in Phase 1.

2.6 Project Procurement Schedule

The following is the Project Procurement Schedule. WSACC reserves the right to modify the Project Procurement Schedule via Addenda issued prior to the date set forth below.

Date	Activity
February 17, 2026	Issue RFQ
March 3, 2026	Project Information Meeting
March 17, 2026	Last Date to Submit Questions Regarding the RFQ
March 24, 2026	SOQ Due Date
April 7, 2026	Notification of Short-Listed Offerors
April 21, 2026	Interviews with Short-Listed Offerors
April 28, 2026	Notification of Preferred Offeror

2.7 Definitions

2.7.1 Business Day: any day on which WSACC is open for regularly conducted business.

2.7.2 Confidential Individual Meetings: There will be no Confidential Individual Meetings.

2.7.3 Design-Builder: The entity with the prime design-build contract with WSACC.

2.7.4 Design-Build Team: All entities listed by the Design-Builder as providing services or construction on the Project. The Design-Builder is not required to list all members of the Design-Build Team in the SOQ. Members of the Design-Build Team may also be referred to as "Team Members."

2.7.5 Design Excellence: Design Excellence is achieved with memorable design solutions that exceed WSACC's vision and defined functional requirements; include state of the art structures and facilities that are high performance and sustainable; and possess a holistic awareness that considers context, site, and the environment.

2.7.6 Key Team Member: Individuals who will be assigned to the Project who play an important role in the design, construction, or management of the Project.

2.7.7 Phase 1: Design and preconstruction activities conducted in support of developing a Phase 2 contract price.

2.7.8 Phase 2: All project activities conducted per the contract price agreement to construct, test, and commission the project.

2.7.9 Procurement: WSACC's process for selecting a Design-Build Team for this Project.

2.7.10 Procurement Documents: All documents issued by WSACC in connection with the Procurement or Project.

© 2017 Design-Build Institute of America

2.7.11 Projects of Similar Scope and Complexity: Projects that had completion dates within the last ten (10) years and that have many or all of the following characteristics:

a. Projects of a similar size and budget that include design and construction of municipal wastewater collection system located in the southeastern United States.

b. Projects that utilize an integrated delivery method that require strong coordination and integration of the design and construction professionals and early involvement of the construction professionals during design;

c. Projects where the Design-Builder was selected prior to the establishment of the final price and schedule and where the Design-Builder collaborated with the Owner to develop the final price and schedule; and/or

2.7.10 Request For Proposal (RFP): There will not be an RFP process. WSACC intends to negotiate a contract with the Design-Build firm selected from the SOQ evaluation.

SECTION 3: PROCUREMENT PROCESS

3.1 General Information

3.1.1 Compliance with Legal Requirements

This Procurement will be in accordance with NCGS 143-128 and all applicable federal, state, and local laws, and WSACC policies and procedures.

3.1.2 Conflict of Interest and Communications with the Owner

a. Consultants who assisted WSACC in the RFQ preparations may not propose or participate on any Design-Build Team on this Project.

b. Offerors are required to conduct the preparation of their SOQs with professional integrity and free of lobbying activities. Communication with WSACC regarding this Project shall be via email or regular mail only and directed to the following WSACC's Representative: Thomas Hahn. Do not communicate about the Project or the Procurement with any other WSACC employees, representatives, or consultants. Communication with WSACC employees, representatives, or consultants regarding the Procurement may cause the firm involved to be disqualified from submitting under this Procurement. Any verified allegation that a responding Offeror or Team Member or an agent or consultant of the foregoing has made such contact or attempted to influence the evaluation, ranking, and/or selection of short-listed Offerors may be the cause for WSACC to disqualify the Offeror team from submitting an SOQ or Proposal, to disqualify the Team Member from participating in the Procurement, and/or to discontinue any further consideration of such Offeror or Team Member.

c. Following the WSACC's approval of the Short-Listed Offerors, WSACC anticipates that certain communications and contacts will be permitted. The RFQ and/or other written communications from WSACC will set forth the rules and parameters of such permitted contacts and communications. To the extent any Offeror intends at any time to initiate contact with the general public regarding the Project, the nature of such intended contact and the substance thereof must be approved in writing by WSACC prior to the commencement of such activities.

3.1.3 Expenses of Offeror and Payment of Stipend

WSACC accepts no liability for the costs and expenses incurred by firms in responding to this Procurement. Each Offeror that enters into the Procurement process shall prepare the required materials and the SOQ at its own expense and with the express understanding that the Offeror cannot make any claims whatsoever for reimbursement from WSACC for the costs and expenses associated with the process, even in the event WSACC cancels this Project or rejects all SOQs.

3.1.4 Public Disclosure

All documentation and submittals provided to WSACC may be considered public documents under applicable laws and may be subject to disclosure. Offerors recognize and agree that WSACC will not

© 2017 Design-Build Institute of America

be responsible or liable in any way for any losses that the Offeror may suffer from the lawful disclosure of information or materials to third parties.

Any materials requested to be treated as confidential documents, proprietary information, or trade secrets must be clearly identified and readily separable from the balance of the SOQ or Proposal. Such designations will not necessarily be conclusive, and Offerors may be required to justify why such material should not, upon written request, be disclosed by WSACC under the applicable public records act. WSACC will endeavor to provide at least two (2) Business Days' notice of a public records request for material submitted pursuant to this Procurement. Offerors must respond to the notice in writing with any objection to the production of the documents within two (2) Business Days of receipt of the notice. All costs incurred by Offerors associated with any public records request are the responsibility of the Offerors.

3.1.5 Protest Procedures

The protest procedures applicable to the Procurement are as follows:

a. All Protests will be directed to: Thomas Hahn, PE, 232 Davidson Highway, Concord, North Carolina 28027, 704.786.1783 ext. 228, t.hahn@wsacc.org.

b. Any Protest based on the form or content of the Procurement documents, which is or should have been apparent prior to the date established for submittal of the SOQ, will not be considered if received by the person set forth above later than ten (10) calendar days prior to the specified submittal date.

c. Protests based on any other circumstances must be received by the person noted above within five (5) business days from the date the Offeror or Short-Listed Offeror was notified of any selection decision; however, in no event will a protest be considered if all SOQs or Proposals are rejected or if the Protest is received after award of the Contract.

d. To be considered, a Protest shall be in writing and shall include: (1) the name, street address, and email address of the aggrieved party; (2) the name of the Project for which the Protest is submitted; (3) a detailed description of the specific grounds for the Protest and any supporting legal and/or factual documentation; and (4) the specific ruling or relief requested.

e. In computing any period of time prescribed by this procedure, the day of the act or event from which the designated period of time begins to run shall not be included. The last day of the period shall be included. Any document received after the close of regular business hours (8:00 a.m. to 5:00 p.m.) shall be deemed received the following Business Day.

f. By submitting an SOQ in response to this Procurement, the Offeror acknowledges that it has reviewed and acquainted itself with the protest procedures herein and agrees to be bound by such procedures as a condition of submitting an SOQ.

3.1.6 Identification of Projects

For each Project identified in the SOQ, provide the following information. The information required in this section should be provided in a separate table for the identified Projects. The identification of Projects will not be evaluated separately. Rather, the Projects will be evaluated in the context of the criteria set forth in Section 5.3.

a. Name of Project;

b. Owner/Customer;

c. Location of Project (include address);

d. Description of the delivery method and integration of design and construction, identifying the firm(s) role as a prime consultant, subconsultant, contractor, subcontractor, or other;

e. Project description and applicability and relevance of the referenced Project to the evaluation criteria for this Project;

f. Name of each Key Team Member who is proposed for this Project who played a significant role on the Project example, including a description of their Project responsibilities and functions;

© 2017 Design-Build Institute of America

g. The initial contract price, the final contract price, and an explanation for any difference between the two amounts;

h. The initial date scheduled for substantial completion, the actual date of substantial completion, and an explanation for any difference between the two dates; and

i. Project contact of the owner or customer (current address, e-mail, and phone number) who can verify the characteristics of the submitted Project example.

3.2 Owner Rights and Procurement Conditions

3.2.1 WSACC reserves without limitation, and may exercise at its sole discretion, the following rights and conditions with regard to this Procurement process:

a. To cancel the Procurement process and reject any and all SOQs;

b. To waive any informality or irregularity;

c. To revise the Procurement Documents and Schedule via an Addendum;

d. To reject any Offeror that submits an incomplete or inadequate response or is not responsive to the requirements of this RFQ;

e. To require confirmation of information furnished by an Offeror, require additional information from an Offeror concerning its SOQ or Proposal and require additional evidence of qualifications to perform the work described in this RFQ;

f. To provide clarifications or conduct discussions, at any time, with one or more Offerors;

g. To contact references who are not listed in the Offeror's SOQs and investigate statements on the SOQs and/or qualification of the Offeror and any firms or individuals identified in the SOQ;

h. To consider Alternative Technical Concepts and/or approaches identified by Offerors;

i. To take any action affecting the RFQ process or the Project that is determined to be in WSACC's best interests; and

j. Approve or disapprove of the use of particular Subconsultants, Subcontractors, or Key Team Members and/or substitutions and/or changes to Subconsultants, Subcontractors, or Key Team Members from those identified in the SOQ. Such approval or disapproval shall not be unreasonably exercised.

3.3 Outline of the Procurement Process

3.3.1 Request for Qualifications (RFQ).

a. This RFQ invites firms to submit SOQs describing in detail their technical, management, and financial qualifications to design, permit, construct, commission, and close out the Project. The issuance of this RFQ is the first phase of the Procurement process.

b. Offerors are invited to participate in an optional, in-person Project Information Meeting. The Project Information Meeting will take place on March 3rd, 2026 at 2:00 PM at 6400 Breezy Lane, Concord, NC 28025. The Project Information Meeting will be an opportunity for Offerors to learn more about the Project.

c. Offerors will submit their SOQ and other deliverables required pursuant to this Procurement at the time and in the manner set forth in this RFQ and any Addenda. WSACC will not consider SOQ or other deliverables that are submitted after the Time set forth in the RFQ. Offerors are solely responsible for making sure that the WSACC receives the SOQ in a timely fashion.

d. WSACC will evaluate the information submitted by each Offeror to 1) determine whether the Offeror meets the mandatory minimum requirements and 2) evaluate the SOQ provided by each Offeror pursuant to the evaluation system described below. Any Offeror who fails to meet the mandatory minimum requirements set forth in this SOQ will be deemed non-responsive and will

© 2017 Design-Build Institute of America

not be considered further by WSACC in this Procurement.

e. All SOQs will be evaluated in accordance solely with the criteria established in the RFQ and any Addenda issued thereto. The evaluation criteria are listed below, including the relative weight or importance given to each criterion.

f. Not more than three responsive and responsible firms will be selected as Short-Listed Offerors. Only those firms that have been short-listed will be invited to participate in an interview.

g. Design-Build Team Members and individual Key Team Members will be used as a basis for selection. Neither the Offeror nor Team Members that are submitted to WSACC as part of the SOQ may substitute a listed consultant, subconsultant or subcontractor, or any individual listed as a Key Team Member. If a change becomes necessary, WSACC will re-evaluate the SOQ, and the change may result in a change to the evaluation and ranking of the Offeror.

3.3.2 Request for Proposal (RFP), Confidential Individual Meetings & Selection Process

There will not be an RFP process. WSACC intends to negotiate a scope and fee for services with the selected Design-Build Team.

3.3.3 Price Proposal

There will not be an RFP process. WSACC intends to negotiate a scope and fee for services with the selected Design-Build Team.

3.3.4 Evaluation and Ranking of Offerors

In the evaluation and ranking of Offerors, WSACC will consider the information submitted in the SOQ, including reference checks, as well as the meetings with the Offerors with respect to the evaluation criteria set forth in the RFQ. The result of the evaluation will be a comparative ranking of Offerors.

For the purpose of selecting and evaluating Offerors, the evaluation criteria will be given the following relative weights:

Criteria	Weight
Team Organization (Section 5.3.1)	10%
Qualifications and Experience of Key Personnel (Section 5.3.2)	40%
Demonstrated Past Performance with Successful Projects of Similar Scope and Complexity (Section 5.3.3)	30%
Delivery Approach (Section 5.3.4)	20%
Interviews with Short-Listed Offerors	Not Scored

3.4 Contract Format

WSACC will enter into negotiations for the Design-Build Agreement with the Preferred Offeror. The Design-Build Agreement is anticipated to utilize the Design-Build Institute of America Progressive Design-Build Agreement for Water and Wastewater Projects, Form Number 545, and the DBIA Standard Form of General Conditions of Contract Between WSACC and Design-Builder, Form Number 535.

SECTION 4: SOQ DOCUMENTATION REQUIREMENTS

4.1. SOQ Format Requirements

The SOQs shall comply with the following format requirements:

4.1.1 SOQs shall be formatted in searchable .pdf format.

4.1.2 The body of the SOQ shall be organized in accordance with the Evaluation Criteria.

© 2017 Design-Build Institute of America

4.1.3 The body of the SOQ, when printed, shall be limited to a maximum of thirty (30) single-sided pages.

a. The **only** documentation that is **not** included in the page count is the following:

i. Letter of interest or cover letter;

ii. Statement of Offeror's Ability to Provide a Proposal Bond, or Performance and Payment Bond;

iii. Statement of Offeror's Ability to Meet WSACC's Insurance Requirements;

iv. Resumes of Key Team Members;

v. Divider tabs, provided that they contain no substantive content; and

vi. Cover pages, provided that they contain no substantive content.

b. **SOQs that exceed the page limit may be rejected.** WSACC, at its sole discretion, reserves the right to remove pages from the sections of any non-conforming SOQ submittals to bring each non-conforming SOQ submittal within the page count requirement.

c. A "page" shall be defined as one single-sided piece of paper that has words, charts, tables, pictures, or graphics. Pages shall be 8.5 x 11 inches.

d. 11 x 17 sheets are also permitted in the SOQ, provided they are included primarily to show a drawing, larger photo or set of photos, or another similar use that would not be reasonable to convey via an 8.5 x 11 sheet. 8.5 x 11 sheets should be used when conveying narrative text in the SOQ. 11 x 17 sheets included as referenced above will count as one page. Each Offeror will be limited to the use of four (4) 11 x 17 sheets in their SOQ submission.

e. The font shall be no smaller than 10 point.

4.2 SOQ Organization

SOQs shall consist of the following parts:

4.2.1 Letter of Interest

4.2.2 Minimum Qualifications

a. Statement of Offeror's Ability to Provide Performance and Payment Bond. (See Section 5.2.1)

b. Statement of Offeror's Ability to Meet WSACC's Insurance Requirements. (See Section 5.2.2)

4.2.3 Technical & Management Qualifications

a. Team Organization (See Section 5.3.1)

b. Qualifications and Experience of Key Personnel (See Section 5.3.2)

c. Demonstrated Past Performance with Successful Projects of Similar Scope and Complexity (See Section 5.3.3)

d. Delivery Approach (See Section 5.3.4)

SECTION 5: SOQ EVALUATION CRITERIA AND SUBMITTAL INFORMATION

5.1 Letter of Interest

The SOQ must include a cover letter containing the name, address, telephone number, fax number, and e-mail address of the Offeror and the principal contact person. The Letter of Interest shall also include the following: (1) name, address, telephone number, fax number, and e-mail address for all listed consultants, subconsultants and/or subcontractors for the Project; and (2) the type of firm or organization (corporation, partnership, joint venture, etc.) that will serve as the prime contracting party. The letter of interest may be a maximum of two (2) pages.

© 2017 Design-Build Institute of America

5.2 Minimum Qualifications

5.2.1 Statement of Offeror's Ability to Provide Performance and Payment Bond (Pass/Fail)

As a **mandatory minimum requirement,** the Offeror must have the ability to obtain a performance and payment bond in the amount of $11,000,000. Offeror shall provide a letter signed by an authorized representative of Offeror's surety company (or agent) confirming that the Offeror can meet this minimum requirement. Any Offeror who fails to meet this mandatory minimum requirement will be considered non-responsive and will not be considered further by WSACC in this Procurement process. The surety shall be a company authorized to conduct business in the state where the Project is located. Letters indicating "unlimited" bonding capability are not acceptable.

5.2.2 Statement of Offeror's Ability to Meet WSACC's Insurance Requirements. (Pass/Fail)

As a **mandatory minimum requirement,** the Offeror must document that it has the ability to meet WSACC minimum insurance requirements which include liability limits not less than statutory for workers compensation and $1,000,000 each occurrence for employer's liability. Commercial General Liability of not less than $1,000,000 combined single limit for each occurrence and $1,000,000 general aggregate for bodily injury and property damage. Umbrella Liability limits of not less than $4,000,000 combined single limit for each occurrence and $4,000,000 general aggregate for bodily injury and property damage. Comprehensive Automobile Liability of no less than $1,000,000 combined single limit for each occurrence for bodily injury and property damage. Any Offeror who fails to meet this mandatory minimum requirement will be considered to be non-responsive and will not be considered further by WSACC in this Procurement. The insurer shall be a company authorized to conduct business in the state where the Project is located.

5.3 Technical and Management Qualifications

The SOQ shall demonstrate the Design-Build Team's ability to undertake the Project by providing the following technical and management qualifications of the Offeror, Team Members, and individual Key Team Members. The Offeror is responsible for ensuring that contact information contained in their referenced Project profiles is correct. The inability to contact a reference may have a detrimental impact on the evaluating qualifications.

Emphasis will be placed on past performance and expertise in performing substantive work on projects that are of Similar Scope and Complexity, as described in the definitions above. WSACC reserves the right to award more points to projects that have more of the characteristics set forth in the definition of Projects of Similar Scope and Complexity. WSACC also reserves the right to award more points to successful projects in which the Offeror, Team Members, and/or individual Key Team Members had substantial responsibility for their respective scopes of work.

The SOQ will be evaluated on the following technical and management qualifications:

5.3.1 Team Organization

a. Describe the corporate structure of the Design-Builder and all Team Members. If the prime Design-Builder is a Joint Venture, all Joint Venture partners must have functional responsibilities for the Project. Describe the duties of each Joint Venture partner.

b. Discuss how the Design-Builder has used this entity structure or similar entity structure to deliver similar projects, lessons learned from those projects, and benefits of the structure to WSACC and this project.

c. Provide an organization chart (showing Team Members, Key Team Members and their firm affiliation) for all phases of the Project from design through final acceptance and warranty and maintenance period. Be certain to identify specific individuals for key functions and show interrelationships and reporting hierarchy. Note whether individuals are performing multiple functions. At a minimum, identify the Key Team Members performing the functions identified below. To the extent that the Design-Builder has additional Key Team Members on their team, the Design-Builder should include those individuals.

   i. Person responsible for the overall management of the Project and design-build contract;

   ii. Designer of Record;

© 2017 Design-Build Institute of America

iii. Person responsible for overall construction management;

iv. Person responsible for on-site field supervision and direction and construction (Superintendent);

v. Person responsible for safety;

vi. Person responsible for quality assurance;

vii. Person responsible for cost controls and budgeting;

viii. Person responsible for scheduling; and

ix. Person responsible for systems testing, configuration, and commissioning.

5.3.2 Qualifications and Experience of Key Personnel

a. Provide a resume for all Key Team Members. Resumes should be no longer than 1 page and should include the following information:

i. Description of the individual's proposed Project role;

ii. Identification of employer and number of years employed by the firm;

iii. Educational background, professional licenses, and/or certifications;

iv. Experience relevant to their proposed role on the Project and how their past performance on previous projects will benefit this Project;

v. Up to three references (current e-mail and phone number) who can verify the Key Team Members' experience relevant to their proposed role on the Project; and

vi. Based on the information available to the Design-Builder, proposed percentage of time that the Design-Builder intends to assign this individual to the Project.

5.3.3 Demonstrated Past Performance with Successful Projects of Similar Scope and Complexity

a. Describe the Team's past performance in successfully managing Projects of Similar Scope and Complexity. For each project identified in the SOQ, provide the information outlined in Section 3.1.6.

b. Describe the Team's past performance in successfully managing Progressive Design-Build or collaborative delivery projects.

c. Describe the Team's past performance in developing integrated design and construction schedules for Projects of Similar Scope and Complexity. Include descriptions of Design-Builder's past performance in the following areas:

i. Past performance in managing the design process;

ii. Past performance permitting Projects of Similar Scope and Complexity; and

iii. Past performance with construction management and construction of Projects of Similar Scope and Complexity.

d. Describe the Team's past performance in developing and/or managing costs.

e. Describe the software used by the Team for design services.

f. Describe the Team's past performance working together and/or describe the steps the Team has taken to promote integration and a collaborative working environment. Include a description of any issues or problems that arose on the projects and how those issues or problems were resolved. WSACC reserves the right to award more points to those teams who have worked together in a collaborative delivery model.

© 2017 Design-Build Institute of America

5.3.4 Delivery Approach

a. Describe the Team's anticipated approach for delivering this project regarding management approach, collaboration strategies, workshop and meeting coordination techniques, and understanding of the Progressive Design-Build process.

b. Include in the narrative the Team's approach to the following:

i. Sequencing construction activities to maximize efficiency and minimize impact on WSACC;

ii. Assessing whether the Design-Builder has achieved performance requirements;

iii. Change orders; and

iv. Configuration, commissioning, and testing Projects of Similar Scope and Complexity.

5.3.5 Interviews with Short-Listed Offerors

a. Short-Listed Offerors will be invited to interview with WSACC regarding the Project and WSACC's objectives and concerns. Although the interviews will not be scored separately as part of the SOQ Evaluation, WSACC will incorporate information provided by Short-Listed Offerors during the interviews into scoring of the criteria described in this RFQ as applicable. The Short-Listed Offerors are expected to participate in the interviews. Any Short-Listed Offeror who fails to attend the interview will be deemed non-responsive and will not be considered further by WSACC in this Procurement.

b. At a minimum, the following Key Team Members should be present for the interview:

i. Person responsible for the overall management of the Project and design-build contract;

ii. Designer of Record; and

iii. Person responsible for overall construction management.

5.4 Minority Business Participation Goals and Submittal Requirements

WSACC has established a 10% Minority Business Participation goal for this project. Because this is a PDB delivery, WSACC will apply this requirement in a phase-appropriate manner, consistent with the level of scope definition available at each phase.

For this PDB procurement, references in the attached forms (Exhibits E thru K) to "Bid" and "Bidder" shall be interpreted as "SOQ/Offeror" for Phase 1 submittals, and references to "low bidder" or "apparent low bidder" shall be interpreted as the "apparent successful Offeror/Design-Builder" at the applicable later milestone.

5.4.1 SOQ Submittal Requirement – Phase 1 (Design & Preconstruction Services)

For purposes of SOQ responsiveness, the Minority Business Participation documentation submitted with the SOQ shall address Phase 1 (Design & Preconstruction Services), which is the portion of the work that can be reasonably identified at the RFQ stage (e.g., design/professional services and other Phase 1 support services).

Offerors shall submit, with the SOQ:

- Affidavit A (Listing of Good Faith Efforts) or Affidavit B (Intent to Perform Contract with Own Workforce), as applicable, and
- the Identification of Minority Business Participation form

This submittal identifies the minority business enterprises proposed for Phase 1 as subcontractors, vendors/suppliers, or providers of professional services. Failure to submit the required documentation with the SOQ may render the SOQ non-responsive.

© 2017 Design-Build Institute of America

5.4.2 Later Submittal Requirement – Phase 2 (Construction Services)

WSACC recognizes that many Phase 2 (Construction) subcontracting opportunities are not fully defined at the SOQ stage. Accordingly, Phase 2 Minority Business Participation commitments and final participation documentation will be addressed later in the PDB process, when the Phase 2 scope and pricing are sufficiently developed (e.g., prior to execution of a GMP / transition into Phase 2 Construction).

At that time, the apparent successful Offeror/Design-Builder will be required to submit Affidavit C (Portion of Work to be Performed by Minority Firms) or Affidavit D (Good Faith Efforts), as applicable, based on the Phase 2 contract value and the then-available subcontracting plan.

The affidavits and forms referenced above are attached to this SOQ for Offeror use.

SECTION 6: LIST OF ATTACHMENTS

1. Exhibit A: Construction Drawings for Coldwater Creek Interceptor Sewer, Dutch Buffalo Creek Interceptor Sewer, and Pump Stations & Force Mains
2. Exhibit B: Record Drawings for Improvements to Mt. Pleasant Pumping Station No. 1 and No. 2
3. Exhibit C: Record Drawings for Mt. Pleasant Northwest Sewer Extension
4. Exhibit D: Performance Requirements
5. Exhibit E: MBE Instructions – Affidavits A and B
6. Exhibit F: Affidavit A – Listing of Good Faith Efforts
7. Exhibit G: Affidavit B – Intent to Perform Contract with Own Workforce
8. Exhibit H: Identification of Minority Business Participation Form
9. Exhibit I: MBE Instructions – Affidavits C and D
10. Exhibit J: Affidavit C – Portion of Work to be Performed by Minority Firms
11. Exhibit K: Affidavit D – Good Faith Efforts

Drawings provided as attachments to this RFQ are for informational purposes only. These drawings cannot be relied upon as an exact representation of actual conditions. The selected Design-Build team shall be responsible for verifying, validating, and supplementing all information required for the design and construction of the Project.

© 2017 Design-Build Institute of America

Exhibit A
Construction Drawings for Coldwater Creek Interceptor Sewer, Dutch Buffalo Creek Interceptor Sewer, and Pump Stations & Force Mains
(Reference Only)

© 2017 Design-Build Institute of America

COLDWATER CREEK INTERCEPTOR SEWER
DUTCH BUFFALO CREEK INTERCEPTOR SEWER
PUMP STATIONS & FORCE MAIN
EPA NO. 370382

CITY OF CONCORD, N.C.

1981

BOARD OF LIGHT AND WATER COMMISSIONERS

DIVISION A·1 GENERAL CONSTRUCTION COLDWATER CREEK INTERCEPTOR
DIVISION B·1 GENERAL CONSTRUCTION DUTCH BUFFALO CREEK INTERCEPTOR
DIVISION C·1 GENERAL CONSTRUCTION PUMP STATIONS & FORCE MAIN

NORTH CAROLINA PROFESSIONAL SEAL ENGINEER TROY A. DOBBS

PEIRSON & WHITMAN, INC.
Consulting Engineers
Raleigh, N.C.

EROSION & SEDIMENTATION CONTROL

North Carolina General statute 113A-51 requires a preconstruction conference for all projects subject to its jurisdiction. As a minimum, representatives of the Owner, Designer, Contractor and the N.C. Dept. of Natural and Economic Resources should attend. The Engineer shall arrange with all parties concerned.

Contractor shall maintain all streetside drainage swales and ditches. All disturbed vegetation in lawns shall be replaced in kind and all ditches and drainage structures maintained free from sediment.

When a line is to be installed along a shoulder with a slope from the road (fill section) dirt removed from the cut is to be stockpiled on the pavement side of the cut. The contractor is to remove all waste material from the site as per the job specifications.

Erosion control measures as indicated on plans or in the specifications are to be installed prior to disturbing any soil and are to be maintained in a satisfactory manner by cleaning, repairing or replacing as required by resident or state inspector.

Use riprap if required on any disturbed stream banks. Contractor is to plan work in such manner that stockpiles of earth are not subject to washing into any stream or drainage area.

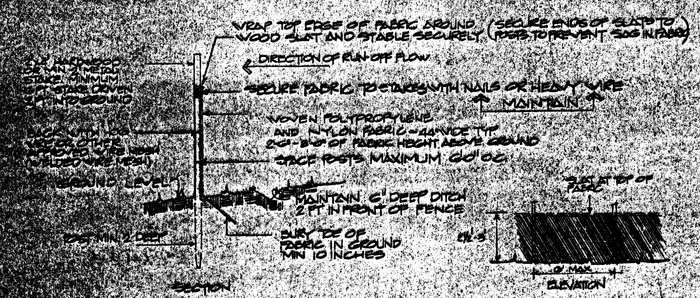

DETAIL SEDIMENT CONTROL FENCE

N.T.S.

GENERAL NOTES

1. COORDINATE ALL WORK WITH THE CITY, THE ENGINEER, TELEPHONE, GAS, POWER UTILITIES, DIVISION OF HIGHWAYS AND OTHERS AS REQUIRED.
2. INSTALL SANITARY SEWER ON ALL SECONDARY ROADS ACCORDING TO DIVISION OF HIGHWAYS "POLICIES AND PROCEDURES FOR ACCOMMODATING UTILITIES ON HIGHWAY RIGHTS OF WAY".
3. TAKE PROPER PRECAUTIONS NOT TO DISTURB EXISTING PROPERTY IRONS. ALL DISTURBED PROPERTY IRONS SHALL BE REPLACED BY A REGISTERED LAND SURVEYOR.
4. RESEED ALL DISTURBED AREAS OUTSIDE OF PAVEMENT WITHIN 30 DAYS OF COMPLETION OF GRADING.
5. RIGHT OF WAY SHALL BE GRADED, SHAPED AND SEEDED AFTER CONSTRUCTION.
6. RIGHT OF WAY SHALL BE GRADED IN A MANNER TO AVOID PONDING OF WATER.
7. ADDITIONAL EROSION CONTROL MEASURES NOT SHOWN ON PLANS MAY BE REQUIRED, IF STABILIZATION IS NOT ACHIEVED WITHIN SPECIFIED TIME LIMITS OR IF UNDUE SEDIMENTATION OCCURS.
8. SCARRED TREES WILL HAVE THE SCARS TRIMMED AND ASPHALT PAINTED.
9. ALL EXCAVATED WOOD AND ROCKS TO BE DISPOSED OFF SITE BY CONTRACTOR. BURY WILL NOT BE PERMITTED ON SITE.
10. FENCES TORN DOWN DURING CONSTRUCTION MUST BE REPLACED. USE TEMPORARY FENCING TO PREVENT ESCAPE OF LIVESTOCK.
11. PLUG OPEN END OF PIPE AT END OF DAY.
12. WHERE BENCHING OF SEWER EASEMENT IS REQUIRED, CONTRACTOR SHALL CONSTRUCT A BERM AT TOP OF SLOPE.
13. USE AND STORAGE OF EXPLOSIVES TO CONFORM TO STATE, FEDERAL AND LOCAL LAWS.
14. ALL COST OF CONNECTIONS TO EXISTING MANHOLES SHALL BE INCLUDED IN UNIT PRICE OF PIPE.
15. ALL COST OF ADAPTORS, ETC., REQUIRED FOR CONNECTIONS OF P.V.C., C.I.P. AND D.I.P. SHALL BE INCLUDED IN UNIT PRICE OF PIPE.
16. ALL BENCH MARKS ARE BASED ON USGS DATUM.
17. INSTALL FORCE MAIN WITH A MINIMUM COVER OF 36" ON ALL PRIVATE MAINTAINED ROADS.
18. ALL CONCRETE BLOCKING TO CURE 7 DAYS BEFORE PRESSURE TEST.
19. [redacted]
20. [redacted]

LEGEND OF SYMBOLS

- NEW SEWER LINE
- EXISTING SEWER LINE
- EXISTING WATER LINE
- EXISTING FIRE HYDRANT
- NEW MANHOLE
- EXISTING MANHOLE
- POWER POLE OR TELEPHONE POLE
- EXISTING OPEN DRAIN OR PRIVATE PIPE
- EXISTING FENCE
- CREEK OR DITCH

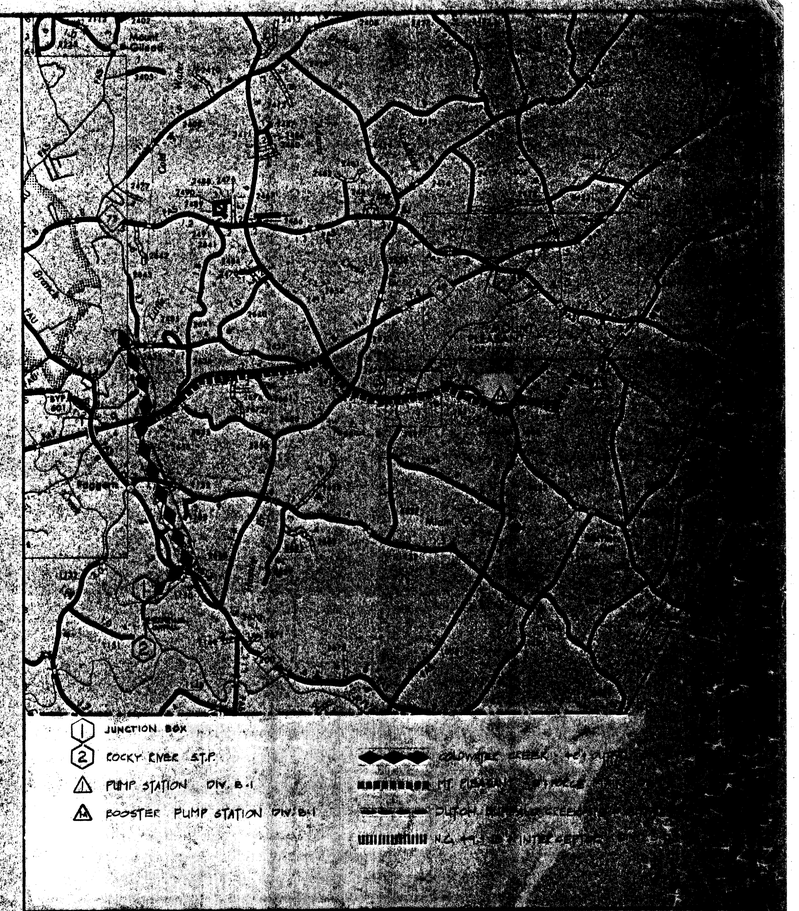

LOCATION MAP

TABLE OF DATA	

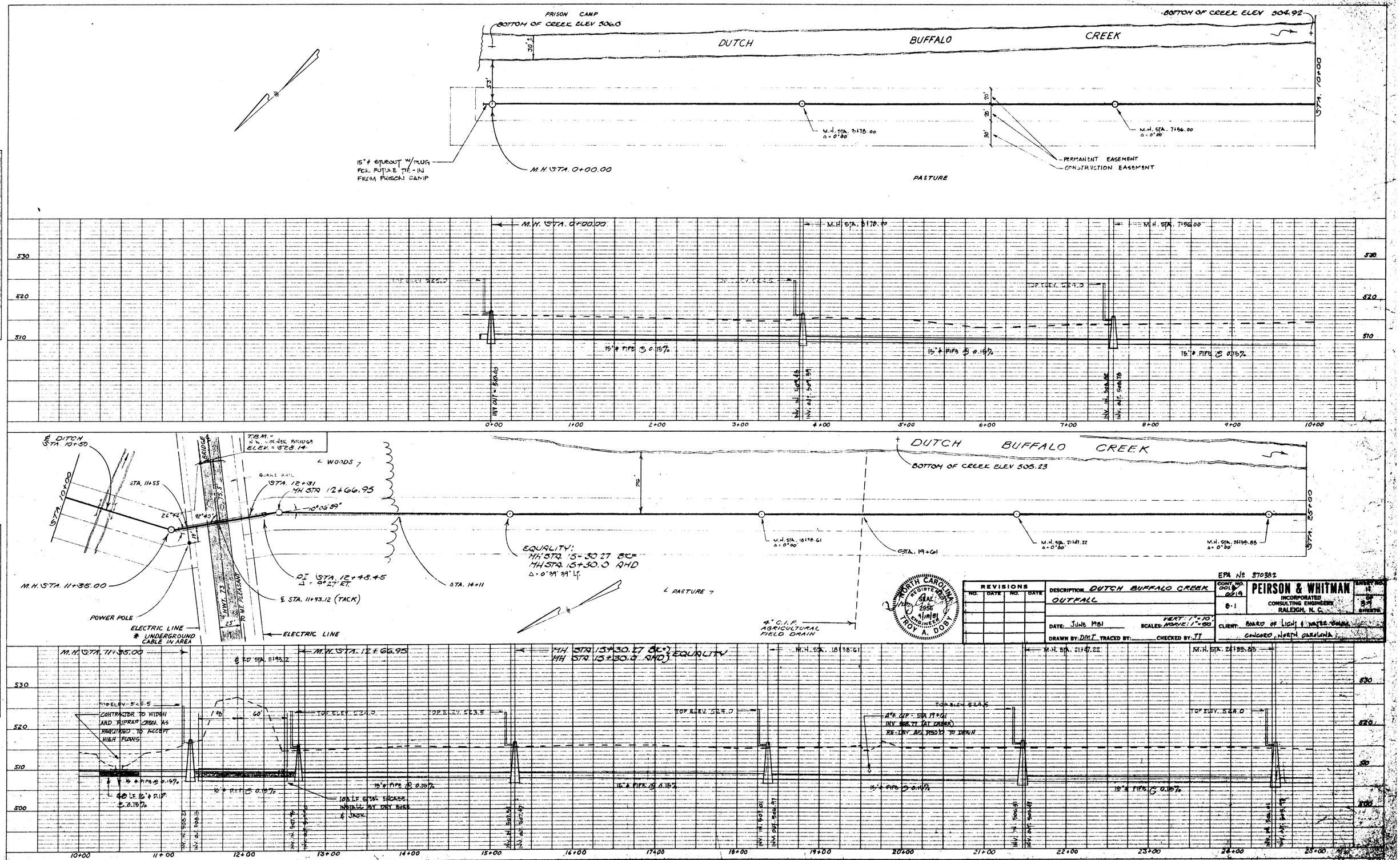

PLAN — SURVEYED / PLOTTED / ALIGNMENT CHECKED / R.W.'S PLOTTED / STRUCTURE NOTATIONS CHECKED — NOTE BOOK No. — BY — DATE

PROFILE — SURVEYED / PLOTTED / GRADES CHECKED / B.M.'S PLOTTED / STRUCTURE NOTATIONS CHECKED — NOTE BOOK No. — BY — DATE

EPA Nº 370382

REVISIONS			
NO.	DATE	NO.	DATE

DESCRIPTION: DUTCH BUFFALO CREEK OUTFALL

DATE: JUNE 1981 — SCALES: VERT. 1" = 10', HORIZ. 1" = 100' — DRAWN BY: DMT — TRACED BY: — CHECKED BY: JT

CONT. NO. 001 6219 — 8-1

PEIRSON & WHITMAN INCORPORATED CONSULTING ENGINEERS RALEIGH, N. C.

SHEET NO. 1 OF 3 SHEETS

CLIENT: BOARD OF LIGHT & WATER COMMS. CONCORD, NORTH CAROLINA

NORTH CAROLINA REGISTERED PROFESSIONAL ENGINEER SEAL 2955 4/1/81 TROY A. DOBY

HIGHWAY FEDERAL AID SHEET

PLATE 2-DOUBLE PLAN AND PROFILE-FULL LINE

TRACEMASTER TILEDYNE NATIONAL TRACING PAPER INDIANAPOLIS, INDIANA PRINTED IN U.S.A.

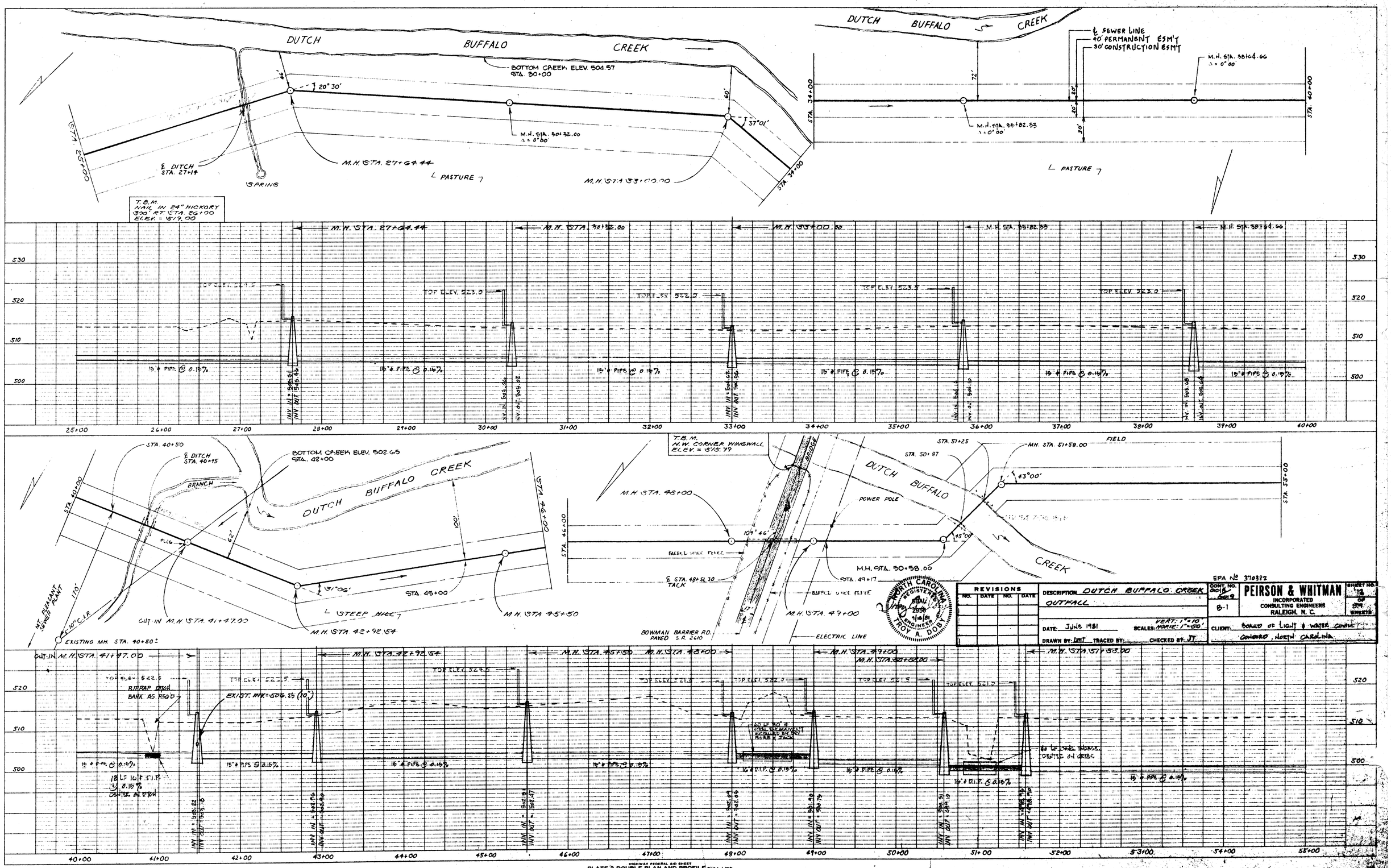

REVISIONS			
NO.	DATE	NO.	DATE

DESCRIPTION: DUTCH BUFFALO CREEK OUTFALL

DATE: JUNE 1981 SCALES: VERT. 1"=10' HORIZ. 1"=50'

DRAWN BY: DMT TRACED BY: CHECKED BY: JT

EPA No 370382

CONT. NO. 0018 0019 B-1

PEIRSON & WHITMAN
INCORPORATED
CONSULTING ENGINEERS
RALEIGH, N. C.

SHEET NO. 12 OF 324 SHEETS

CLIENT: BOARD OF LIGHT & WATER COMM.
CONCORD, NORTH CAROLINA

PLAN — SURVEYED / PLOTTED / GRADES CHECKED / STRUCTURE DIMENSIONS CHECKED / NOTE BOOK / ALIGNMENT CHECKED / RT. OF WAY CHECKED / No. / BY: / DATE:

PROFILE — SURVEYED / PLOTTED / GRADES CHECKED / STRUCTURE DIMENSIONS CHECKED / NOTE BOOK / No. / BY: / DATE:

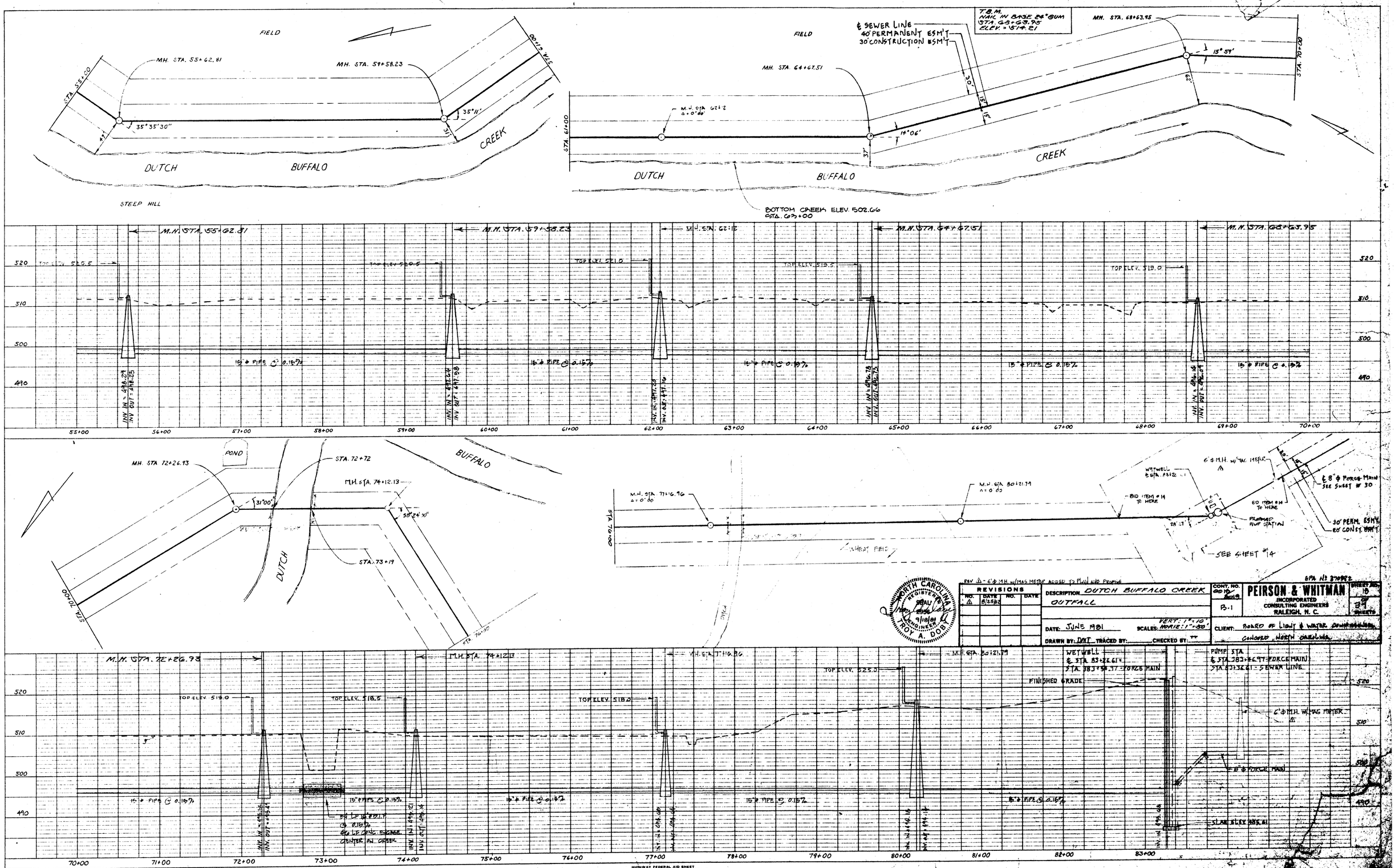
FIELD
MH. STA. 55+62.81
MH. STA. 59+58.23
STA. 55+00
STA. 62+12
35°35'30"
35°11'
DUTCH
BUFFALO
CREEK
STEEP HILL
FIELD
MH. STA. 64+67.51
M.H. STA 62+12 Δ=0°00
STA. 61+00
℄ SEWER LINE
40' PERMANENT ESM'T
30' CONSTRUCTION ESM'T
T.B.M.
NAIL IN BASE 24" GUM
STA. 68+63.95
ELEV. = 514.21
MH. STA. 68+63.95
15°59'
STA. 70+00
14°06'
BOTTOM CREEK ELEV. 502.66
STA. 63+00
M.H. STA. 55+62.81
M.H. STA. 59+58.23
M.H. STA. 64+67.51
M.H. STA. 68+63.95
TOP ELEV. 520.5
TOP ELEV. 521.0
TOP ELEV. 519.5
TOP ELEV. 519.0
15" ϕ PIPE @ 0.15%
INV. IN = 498.29
INV. OUT = 498.25
INV. IN = 497.68
INV. OUT = 497.58
INV. IN = 497.28
INV. OUT = 497.16
INV. IN = 496.78
INV. OUT = 496.72
INV. IN = 496.16
INV. OUT = 496.04
55+00
56+00
57+00
58+00
59+00
60+00
61+00
62+00
63+00
64+00
65+00
66+00
67+00
68+00
69+00
70+00
POND
MH. STA 72+26.93
STA. 72+72
M.H. STA. 74+12.13
BUFFALO
31°00'
58°24'30"
DUTCH
STA. 73+19
STA. 70+00
M.H. STA. 77+16.96 Δ=0°00
M.H. STA. 80+21.79 Δ=0°00
STA. 76+00
WHEAT FIELD
WETWELL
℄ STA. 83+26.61
BID ITEM #14 TO HERE
BID ITEM #14 TO HERE
PROPOSED PUMP STATION
6' ϕ M.H. w/MAG METER
℄ 8" ϕ FORCE MAIN SEE SHEET # 30
30' PERM. ESM'T
20' CONST. ESM'T
SEE SHEET #14
M.H. STA. 72+26.93
M.H. STA. 74+12.13
M.H. STA. 77+16.96
M.H. STA. 80+21.79
TOP ELEV. 519.0
TOP ELEV. 518.5
TOP ELEV. 518.0
TOP ELEV. 525.0
FINISHED GRADE
WETWELL
℄ STA. 83+26.61
STA. 383+58.37 - FORCE MAIN
PUMP STA.
℄ STA. 383+46.97 - FORCE MAIN
STA. 83+36.61 - SEWER LINE
6' ϕ M.H. w/MAG METER
8" ϕ FORCE MAIN
SLAB ELEV. 525.81
15" ϕ PIPE @ 0.15%
INV. IN = 495.36
INV. OUT = 495.21
INV. IN = 494.21
INV. OUT = 494.14
INV. IN = 494.00
INV. OUT = 493.94
INV. IN = 493.46
INV. OUT = 493.34
INV. IN = 493.08
70+00
71+00
72+00
73+00
74+00
75+00
76+00
77+00
78+00
79+00
80+00
81+00
82+00
83+00
PLAN
SURVEYED
PLOTTED
NOTE BOOK
ALIGNMENT CHECKED
RF OF WAY CHECKED
No.
DATE
BY
PROFILE
GRADES CHECKED
R. OF W. CHECKED
STRUCTURE NOTATIONS CHECKED
NORTH CAROLINA REGISTERED PROFESSIONAL ENGINEER SEAL 9/10/81 TROY A. DOBIE
REV. Δ - 6' ϕ M.H. w/MAG METER ADDED TO PLAN AND PROFILE
REVISIONS
NO. | DATE | NO. | DATE
Δ | 8/25/82
DESCRIPTION DUTCH BUFFALO CREEK OUTFALL
DATE: JUNE 1981
SCALES: VERT. 1" = 10' HORIZ. 1" = 50'
DRAWN BY: DMT TRACED BY: CHECKED BY: TT
CONT. NO. 90019
B-1
PEIRSON & WHITMAN
INCORPORATED
CONSULTING ENGINEERS
RALEIGH, N. C.
SHEET NO. 10 OF 34 SHEETS
CLIENT: BOARD OF LIGHT & WATER COMMISSIONERS
CONCORD, NORTH CAROLINA
EPA No 370982
HIGHWAY FEDERAL AID SHEET
PLATE 2-DOUBLE PLAN AND PROFILE-FULL LINE
3M TELEDYNE NATIONAL TRACING PAPER
INDIANAPOLIS, INDIANA
PRINTED IN U.S.A.

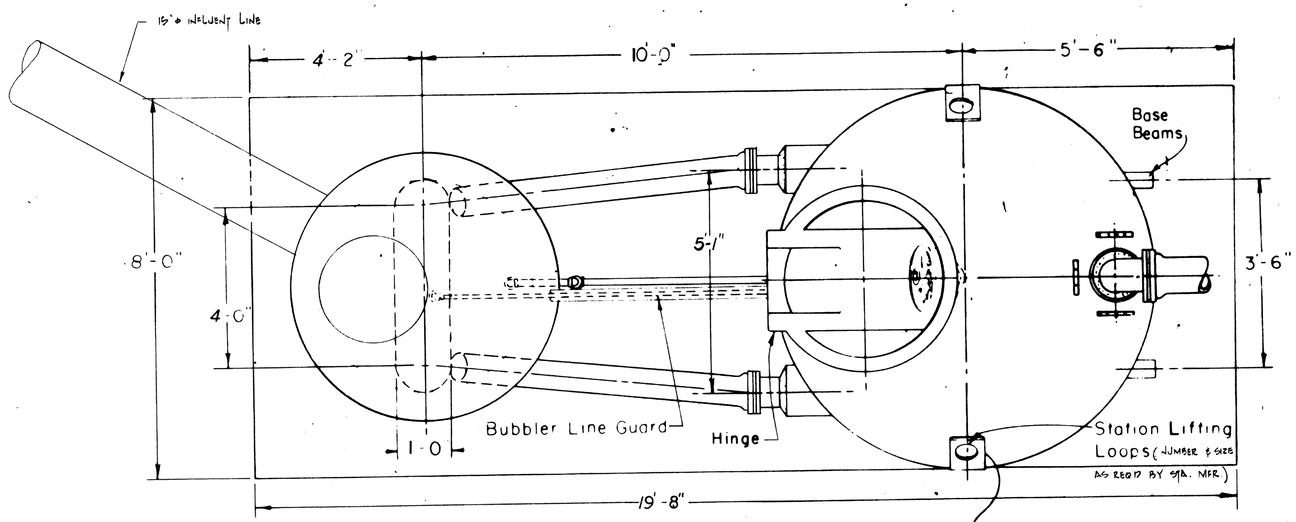

SETTING PLAN

17 Lb Magnesium Anode Pack
One Installed Ea Side (2 Furnished)

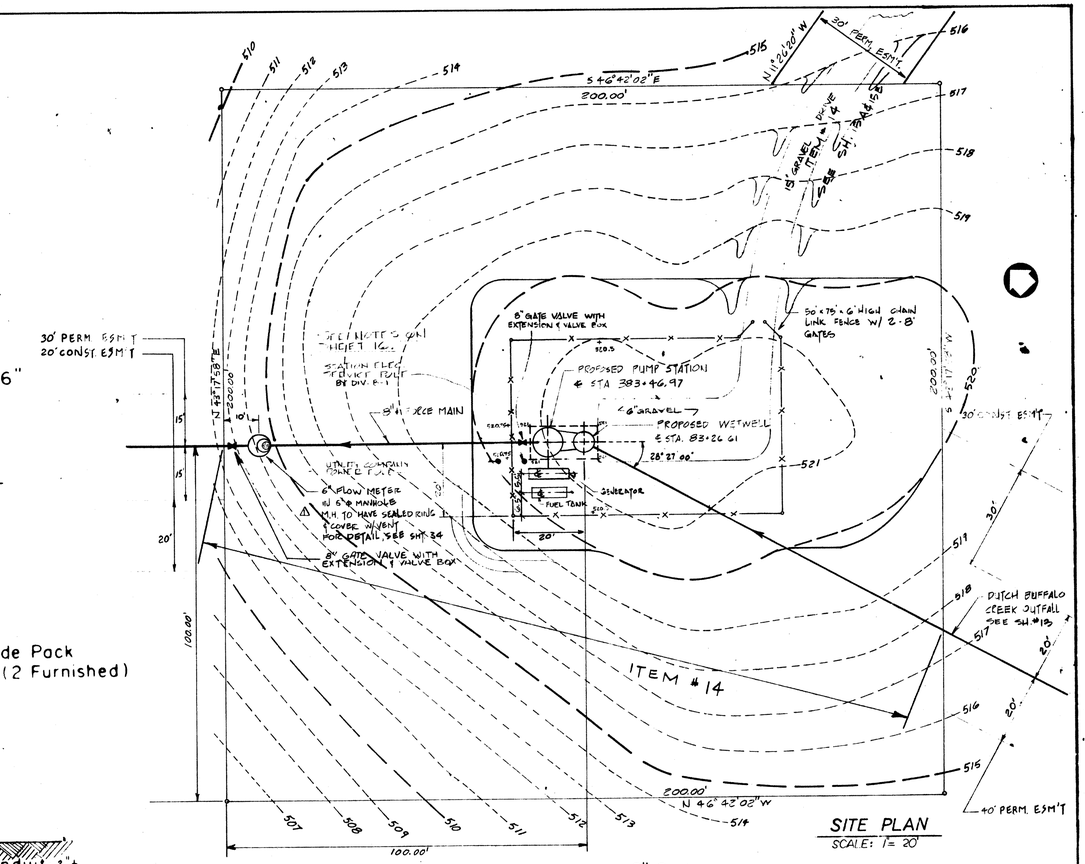

SITE PLAN
SCALE: 1" = 20'

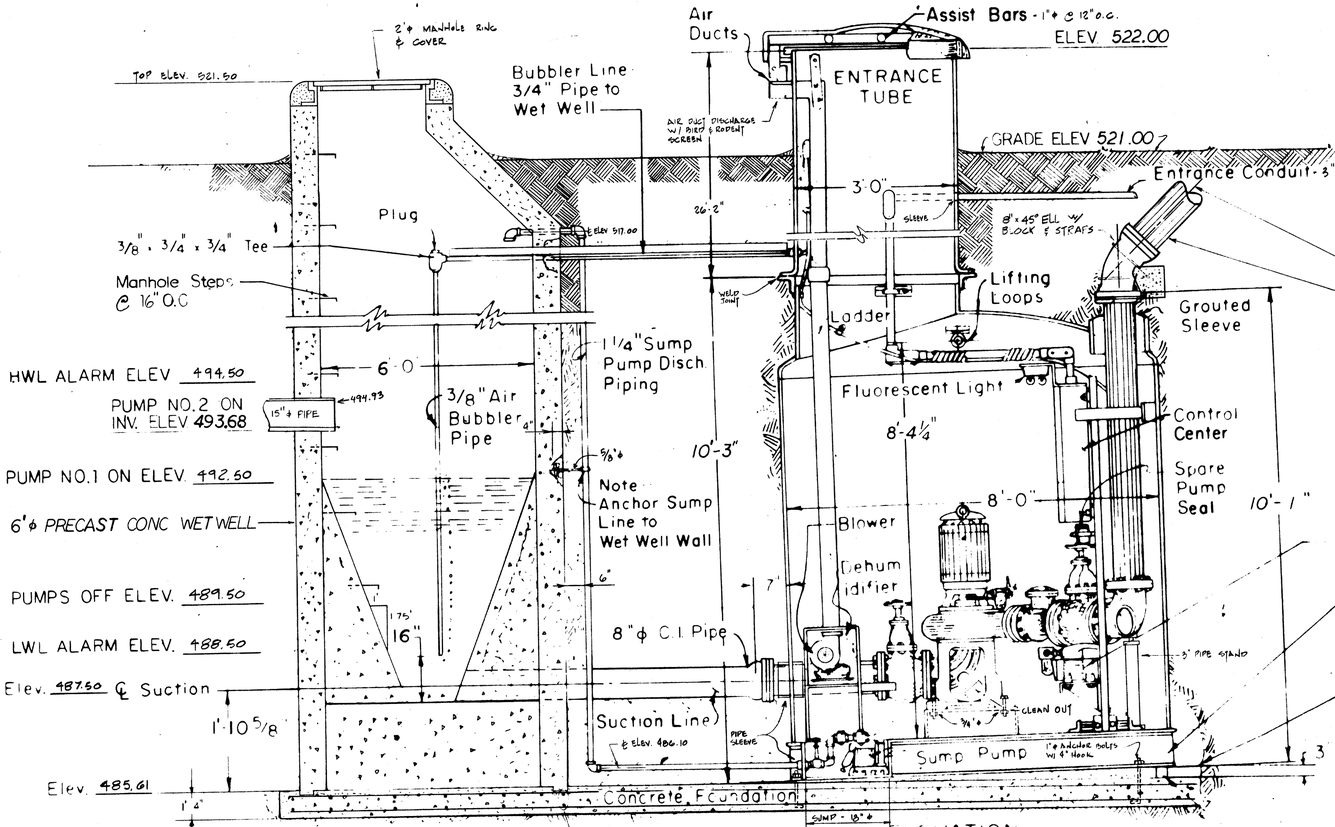

WET WELL

ELEVATION
(CROSS SECTION)

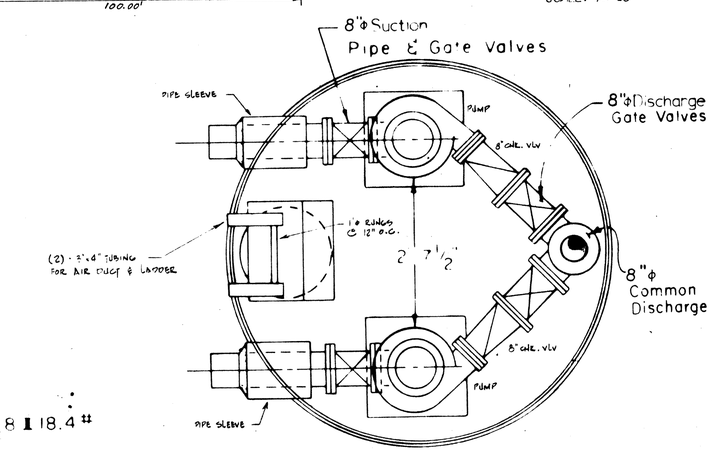

STATION PLAN

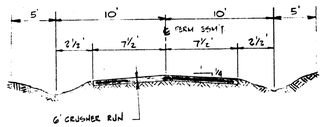

CROSS-SECTION ACCESS ROAD
NTS

Rev. No. 4 - 6'φ Flow Meter Manhole Added to Site Plan

REVISIONS				
NO	DATE	NO	DATE	DESCRIPTION: PUMP STATION #1
4	8/25/82			
				DATE: JUNE 1981 SCALES: NONE
				DRAWN BY — TRACED BY — CHECKED BY

NORTH CAROLINA PROFESSIONAL SEAL ENGINEER ROY A. DOBY 1/12/81

S.P.A. No. 370382

CONT. NO. 0018/0019 — B-1

PEIRSON & WHITMAN
INCORPORATED
CONSULTING ENGINEERS
RALEIGH, N.C.

SHEET NO. 14 OF 39 SHEETS

CLIENT: BOARD OF LIGHT & WATER COMMISSIONERS
CONCORD, NORTH CAROLINA

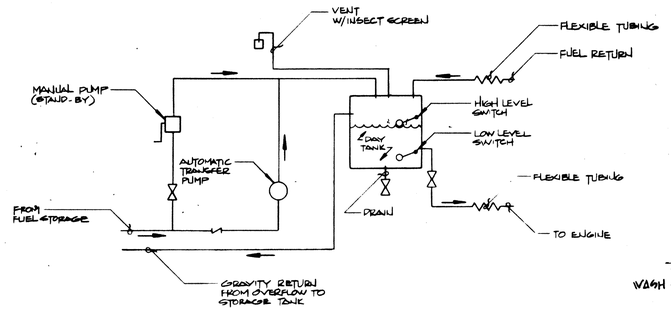

FUEL PIPING SCHEMATIC NO SCALE

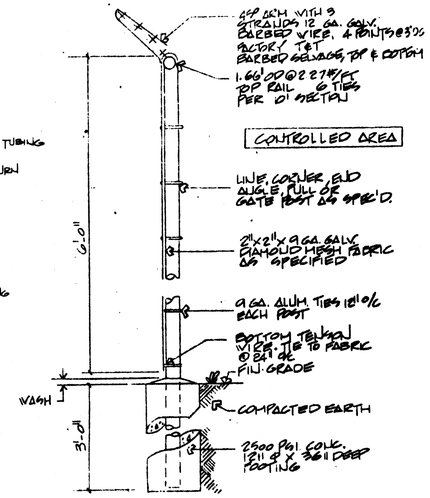

(CHAIN LINK) METAL FENCE

SCALE 3/4" = 1'-0"

PANEL 'A'											
LOAD		CIRCUIT TO	CKT. BKR.			CKT. BKR.		CIRCUIT TO	LOAD	
L1	L2		TRIP	NO.		NO.	TRIP		L1	L2
26		JACKET WATER HTR.	30	1		2	15	C/O	11	
	25	JACKET WATER HTR.	30	3		4	20	FUEL PUMP		11
2		BATTERY CHARGER	15	5		6	15	SPARE	10	
	5	SPARE	15	7		8	15	SPARE		5
TOTAL		DESCRIPTION: 120/240, 1-PHASE 3W WITH S/N				NUMBER OF POLES:			TOTAL	
21	30	INTERRUPTING CAPACITY: 10000 AIC				MAINS: 100A			21	16
		LOCATION: WITH GENERATOR PACKAGE			TOTAL	48		46	MAIN BKR.: 60A	

SUPPLIED WITH GENERATOR PACKAGE

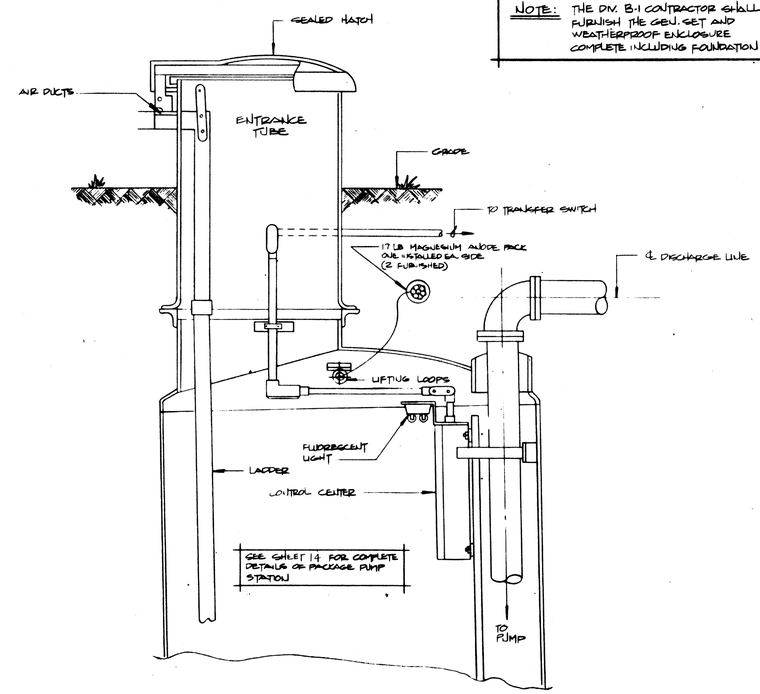

NOTE: THE DIV. B-1 CONTRACTOR SHALL FURNISH THE GEN. SET AND WEATHERPROOF ENCLOSURE COMPLETE INCLUDING FOUNDATION

TYPICAL PACKAGE PUMP STATION — ELEVATION

CROSS SECTION

NOT TO SCALE

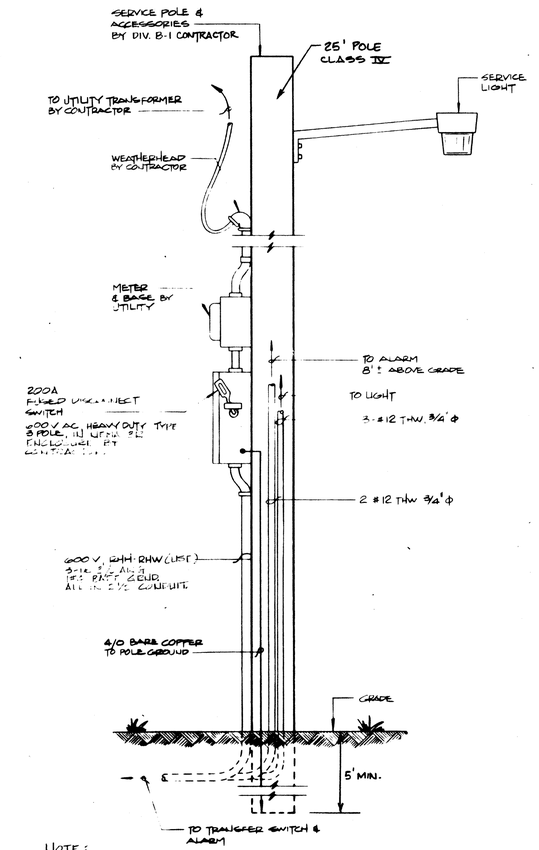

NOTE: SEE SITE PLAN FOR POLE LOCATIONS

SERVICE POLE

NOT TO SCALE

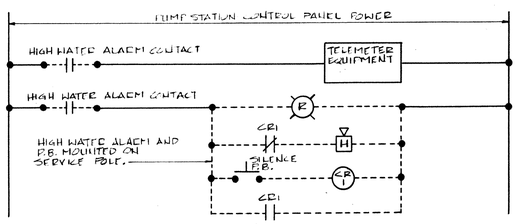

HIGH WATER ALARM SCHEMATIC

NOT TO SCALE

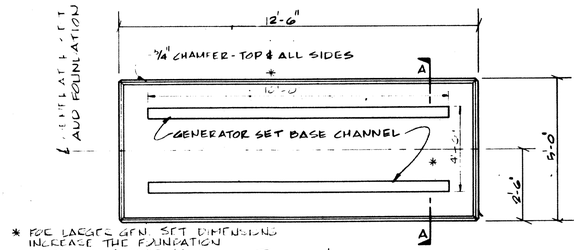

* FOR LARGER GEN. SET DIMENSIONS INCREASE THE FOUNDATION DIMENSION ACCORDINGLY.

PLAN

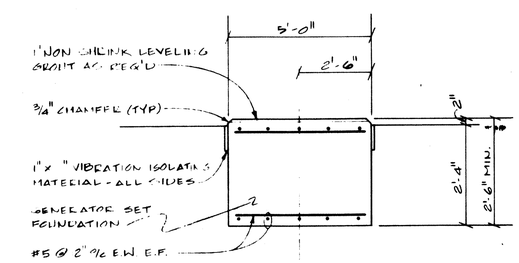

SECTION 'A-A'

GENERATOR SET FOUNDATION

SCALE: NONE

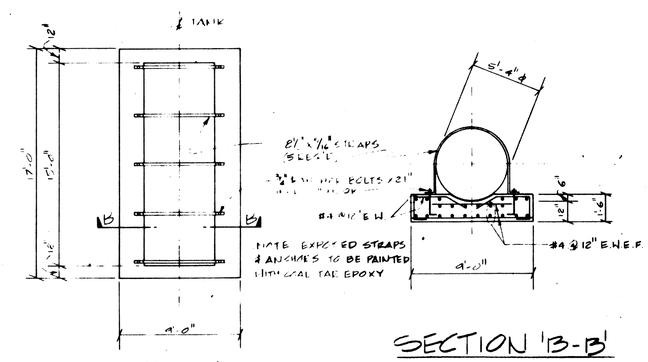

NOTE EXPOSED STRAPS & ANCHORS TO BE PAINTED WITH COAL TAR EPOXY

PLAN

SECTION 'B-B'

1000 GALLON TANK PAD

NOT TO SCALE

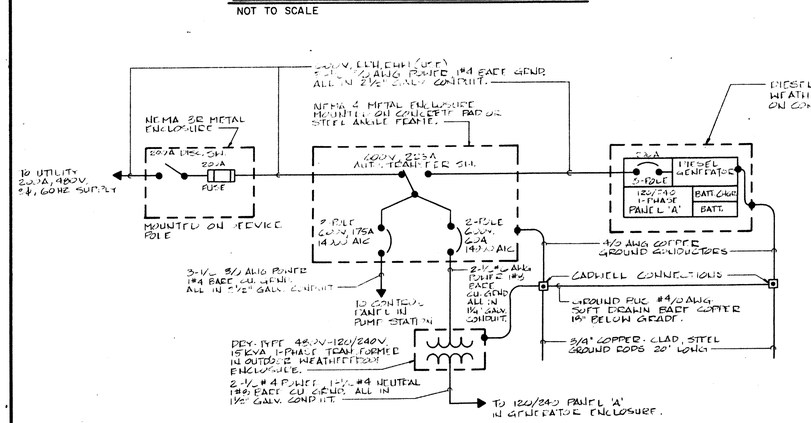

ONE-LINE DIAGRAM

NOT TO SCALE

GENERATOR RATING		
480V, 3 PH, 4W, 60HZ 1800 RPM, 0.8 PF		
	STAND-BY	PRIME
W/O FAN	125 KW	110 KW
W/FAN	125 KW	100 KW
W/FAN	135 KW	121 KW
ENGINE HP		
W/O FAN	195 HP	165 HP

NOTES:

1. ALL CABLE BY CONTRACTOR TO BE 600V, RHH CHW (USE) TYPE
2. ALL CONCRETE PADS AND ANGLE FRAMES FOR EQUIPMENT MOUNTING TO BE FURNISHED AND INSTALLED BY THIS CONTRACTOR.

NORTH CAROLINA PROFESSIONAL SEAL 8853 ENGINEER MERLIN J. ADAMS 7/18/01

NORTH CAROLINA REGISTERED PROFESSIONAL ENGINEER TROY A. DOBBS 7/18/01

REVISIONS			
NO.	DATE	NO.	DATE

DESCRIPTION: DUTCH BUFFALO CREEK PUMP STATION #1 ELECTRICAL

GENERATOR & TANK FOUNDATIONS

DATE: SCALES: NONE

DRAWN BY: TRACED BY: CHECKED BY:

CONT. NO. 97-01-0219 B-1

PEIRSON & WHITMAN INCORPORATED CONSULTING ENGINEERS RALEIGH, N. C.

SHEET NO. 15 OF 39 SHEETS

CLIENT: BOARD OF LIGHT & WATER COMMISSIONERS CONCORD, NORTH CAROLINA

EPA NO. 370382

CASE BLUEPRINT & SUPPLY CO. 40137

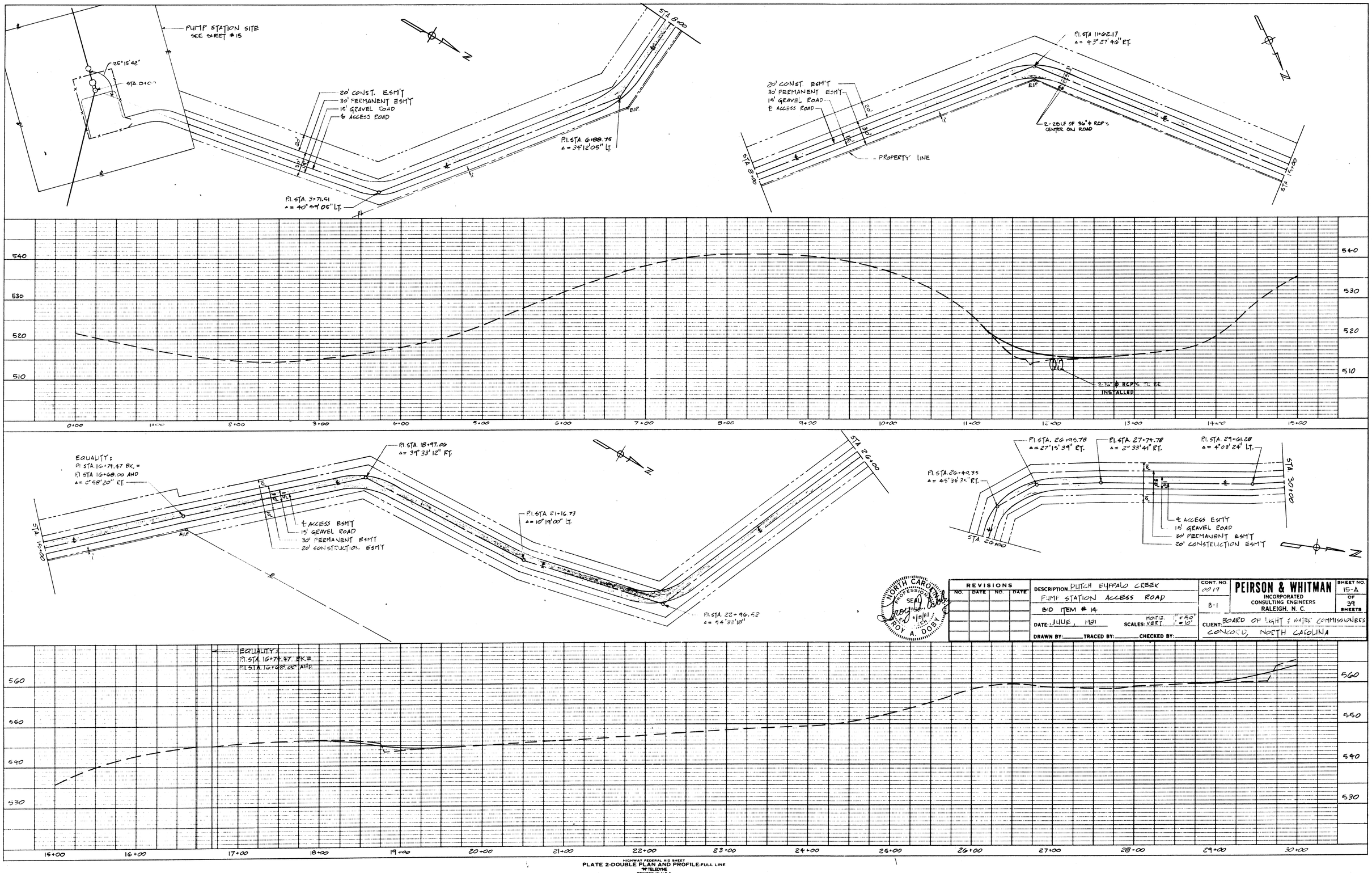

PLAN SURVEYED ____ BY: ____ DATE ____
NOTE BOOK ____ PLOTTED ____ ALIGNMENT CHECKED ____
No. ____ R/W DWG. CHECKED ____

PROFILE SURVEYED ____ BY: ____ DATE ____
NOTE BOOK ____ PLOTTED ____ GRADES CHECKED ____
No. ____ B.M.'S NOTED ____ STRUCTURE NOTATIONS CHECKED ____

NORTH CAROLINA PROFESSIONAL ENGINEER SEAL 7878 ROY A. DORY

REVISIONS			
NO.	DATE	NO.	DATE

DESCRIPTION: DUTCH BUFFALO CREEK
PUMP STATION ACCESS ROAD
BID ITEM # 14
DATE: JUNE, 1981 SCALES: HORIZ. 1" = 50' VERT. 1" = 10'
DRAWN BY: ____ TRACED BY: ____ CHECKED BY: ____

CONT. NO. 0019
B-1

PEIRSON & WHITMAN
INCORPORATED
CONSULTING ENGINEERS
RALEIGH, N. C.

SHEET NO. 15-A OF 39 SHEETS

CLIENT: BOARD OF LIGHT & WATER COMMISSIONERS
CONCORD, NORTH CAROLINA

HIGHWAY FEDERAL AID SHEET
PLATE 2-DOUBLE PLAN AND PROFILE-FULL LINE
TELEDYNE
PRINTED IN U.S.A.

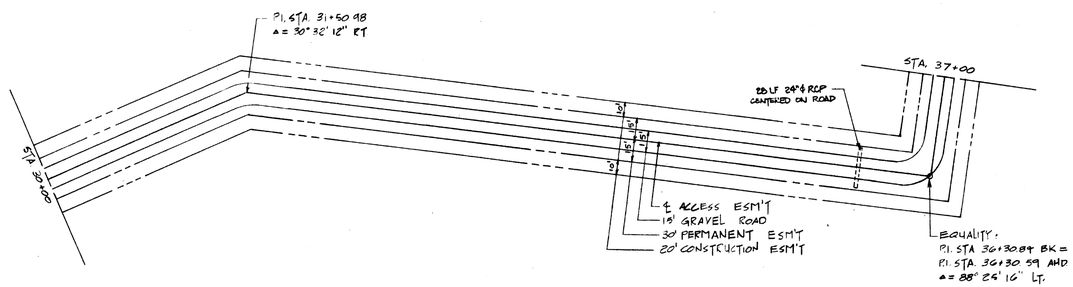

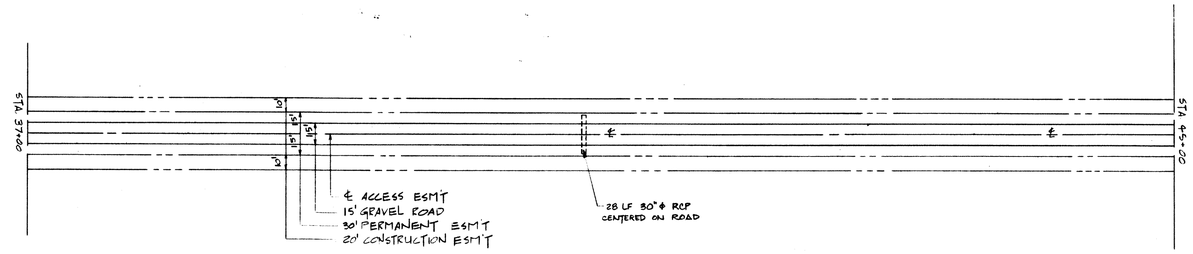

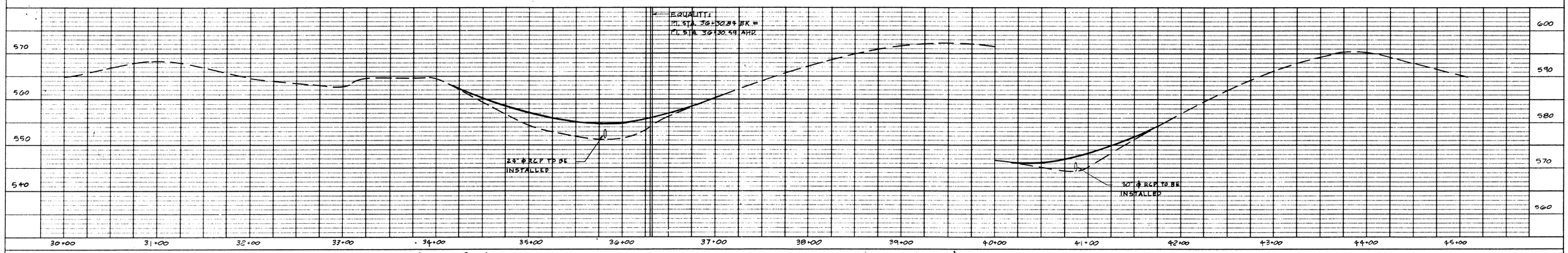

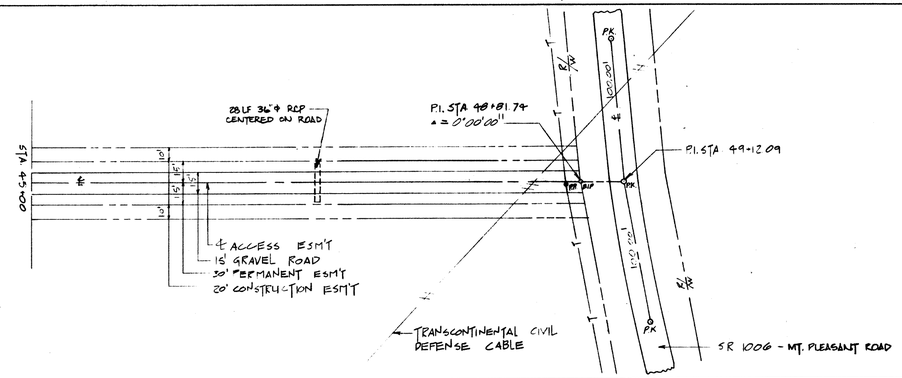

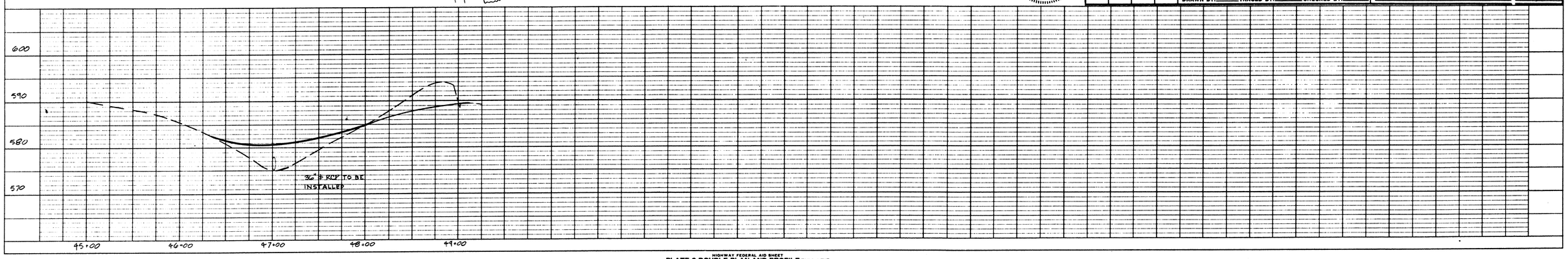

PLAN			
NOTE BOOK	SURVEYED		
	PLOTTED		
	ALIGNMENT CHECKED		
No.	RT. OF WAY CHECKED		
	BY		DATE

PROFILE			
NOTE BOOK	SURVEYED		
	PLOTTED		
	GRADES CHECKED		
No.	BRIDGE		
	STRUCTURE NOTATIONS CHECKED		
	BY		DATE

NORTH CAROLINA PROFESSIONAL SEAL 12956 ENGINEER ROY A. DODY 1/10/81

REVISIONS			
NO.	DATE	NO.	DATE

DESCRIPTION: DUTCH BUFFALO CREEK
PUMP STATION ACCESS ROAD
BID ITEM # 14
DATE: JUNE, 1981
SCALES: HORIZ. 1" = 50' VERT. 1" = 10'
DRAWN BY: SE TRACED BY: CHECKED BY:

CONT. NO. 0019
B-1

PEIRSON & WHITMAN
INCORPORATED
CONSULTING ENGINEERS
RALEIGH, N. C.

SHEET NO. 15-B OF 39 SHEETS

CLIENT: BOARD OF LIGHT & WATER COMMISSIONERS
CONCORD, NORTH CAROLINA

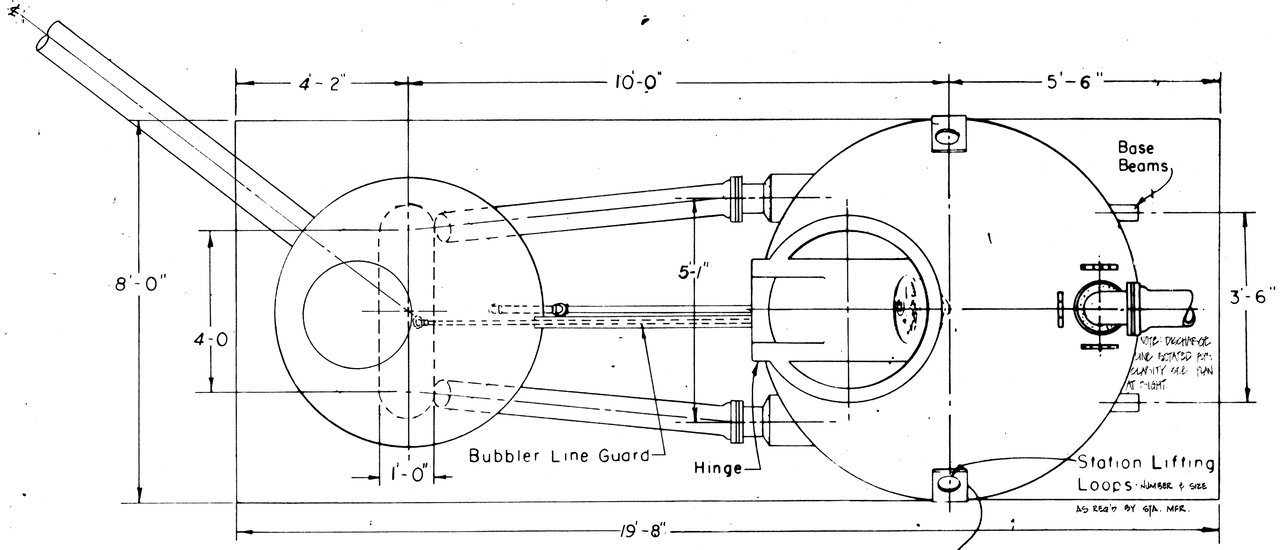

SETTING PLAN

17 Lb Magnesium Anode Pack
One Installed Ea Side (2 Furnished)

UTILITY SERVICES AND METERING

NOTE 1. The Contractor shall furnish and install all wiring and connections required for a complete and ready-to-operate electric power service installation in full compliance with the requirements of the Electric Utility serving the project.

NOTE 2. It shall be the Contractor's responsibility to ascertain any items of equipment, wiring, connections and installation pertaining to the electric service and metering that may be furnished by the electric utility serving the project. The Contractor shall furnish and install all other equipment, wiring, connections and grounding required for a complete installation, at no additional cost to the Owner, even though each and every item is not mentioned or described in these Specifications or designated on the Contract Drawings.

NOTE 3. The Contractor shall confirm all details pertaining to electric service and metering with the electric utility before installation.

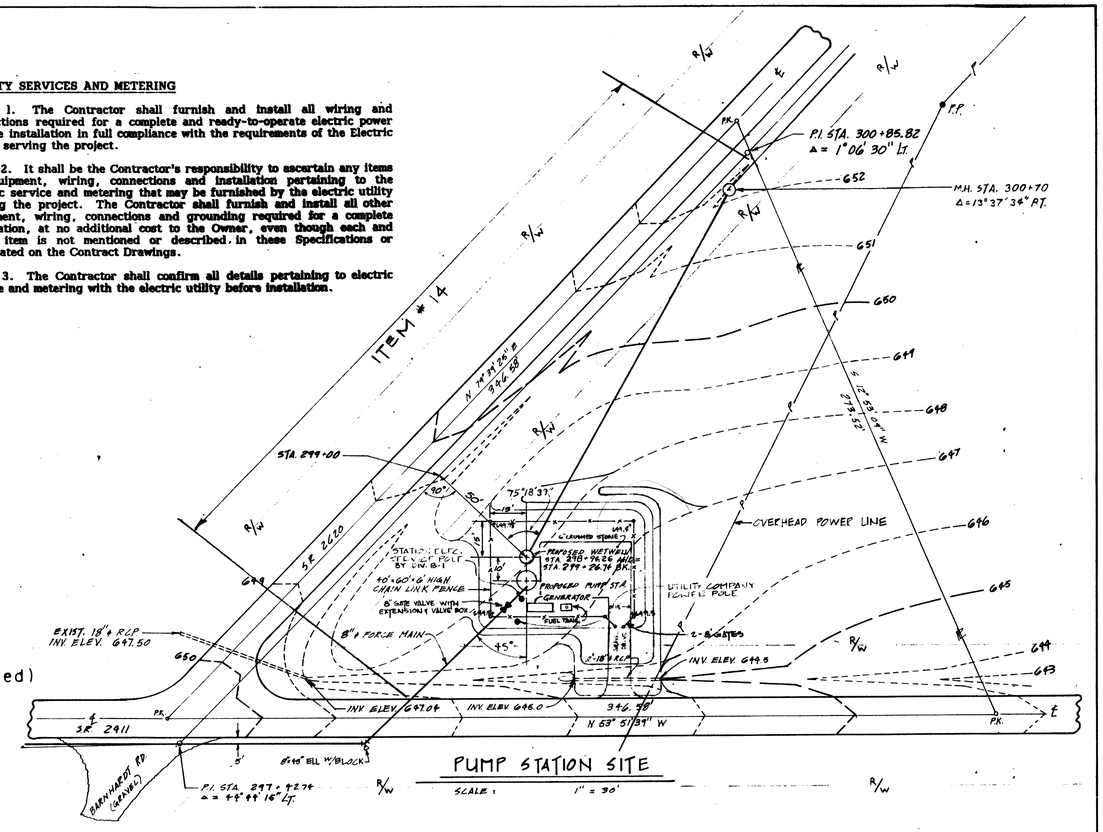

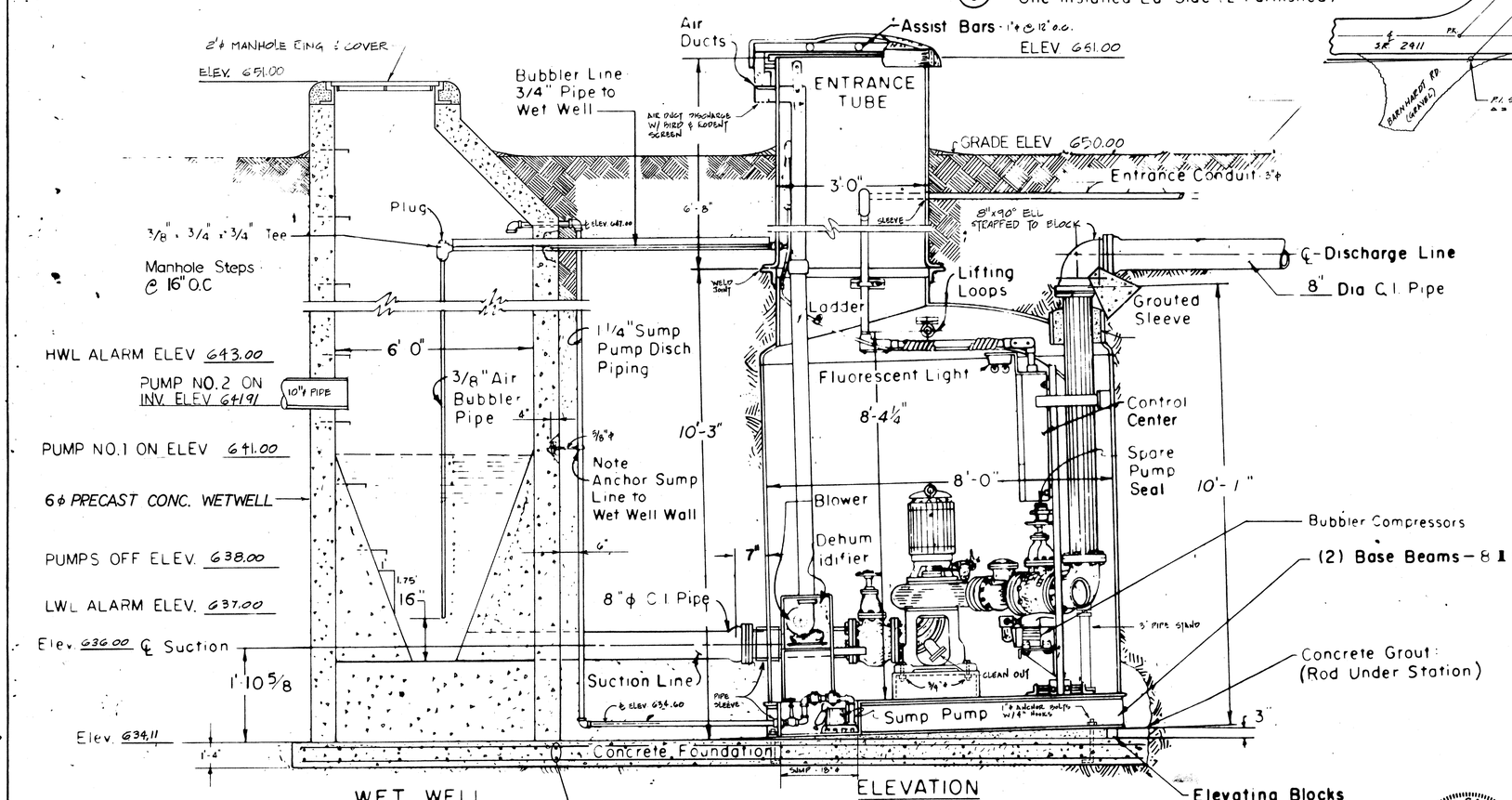

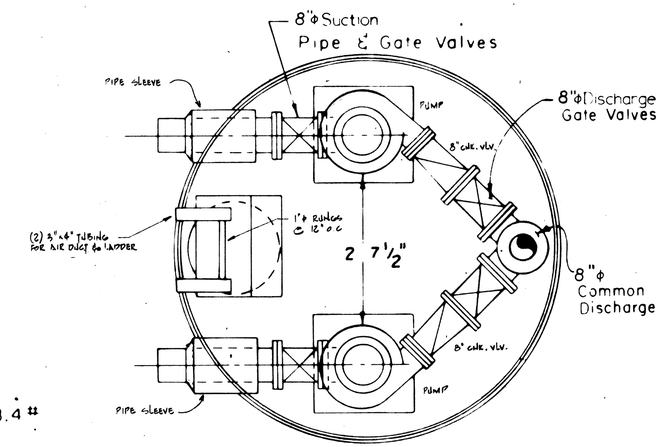

STATION PLAN

EPA NO. 370382

REVISIONS				DESCRIPTION: PUMP STATION #1-A (STA. 2)	CONT. NO. 0018-5019	PEIRSON & WHITMAN INCORPORATED CONSULTING ENGINEERS RALEIGH, N. C.	SHEET NO. 16 OF 39 SHEETS
NO.	DATE	NO.	DATE		B-1		
				DATE: JUNE, 1981 SCALES: None		CLIENT: BOARD OF LIGHT & WATER COMMISSIONERS CONCORD, NORTH CAROLINA	
				DRAWN BY: TRACED BY: CHECKED BY:			

NORTH CAROLINA PROFESSIONAL SEAL 4/15/81 ENGINEER TROY A. DOBBS

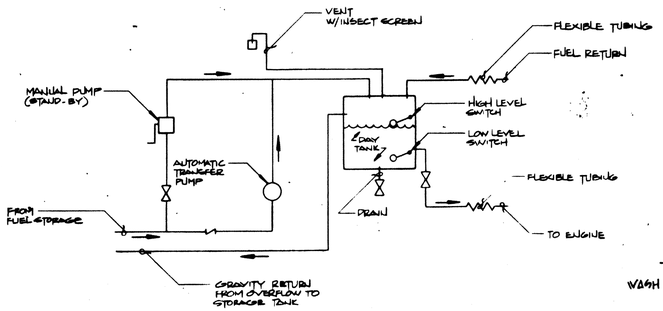

FUEL PIPING SCHEMATIC NO SCALE

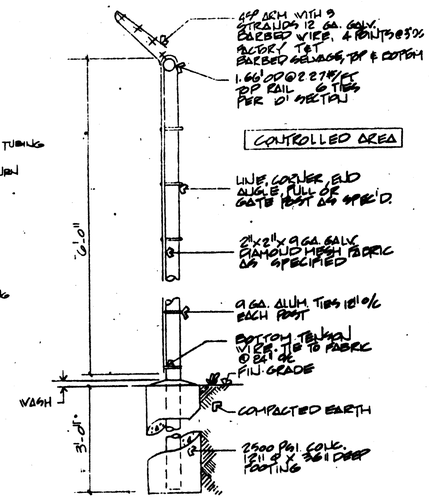

(CHAIN LINK) METAL FENCE

SCALE 3/4" = 1'-0"

PANEL 'A'											
LOAD		CIRCUIT TO	CKT. BKR.			CKT. BKR.		CIRCUIT TO	LOAD	
L_1	L_2		TRIP	NO.		NO.	TRIP		L_1	L_2
26		JACKET WATER HTE.	30	1		2	15	C/O	11	
	25	JACKET WATER HTE.	30	3		4	20	FUEL PUMP		11
2		BATTERY CHARGER	15	5		6	15	SPARE	10	
	5	SPARE	15	7		8	15	SPARE		5
TOTAL		DESCRIPTION: 120/240, 1-PHASE 3W WITH S/N				NUMBER OF POLES:			TOTAL	
21	30	INTERRUPTING CAPACITY: 10000 AIC				MAINS: 100A			21	16
		LOCATION: WITH GENERATOR PACKAGE	TOTAL	48	46	MAIN BKR.: 60A				

S/N

SUPPLIED WITH GENERATOR PACKAGE

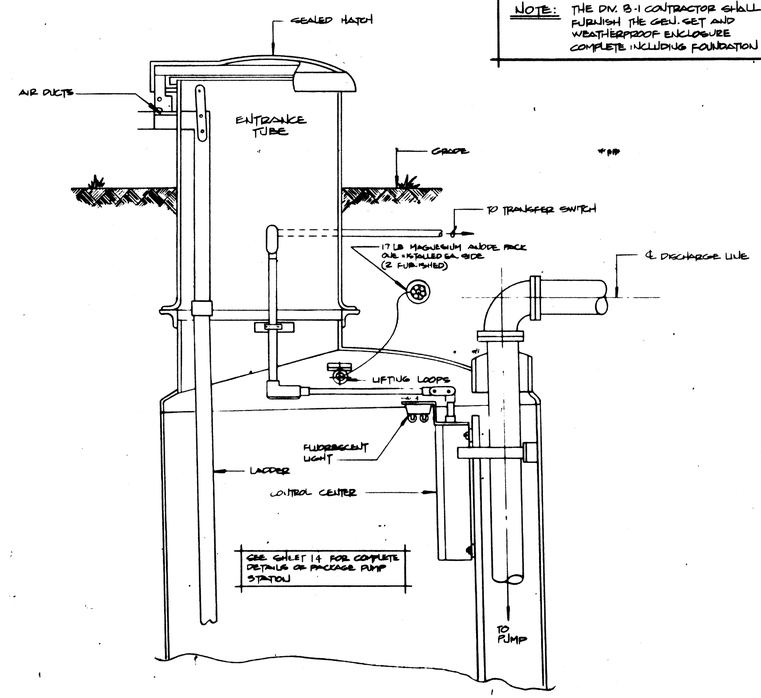

NOTE: THE DIV. 8-1 CONTRACTOR SHALL FURNISH THE GEN. SET AND WEATHERPROOF ENCLOSURE COMPLETE INCLUDING FOUNDATION

TYPICAL PACKAGE PUMP STATION — ELEVATION

CROSS SECTION

NOT TO SCALE

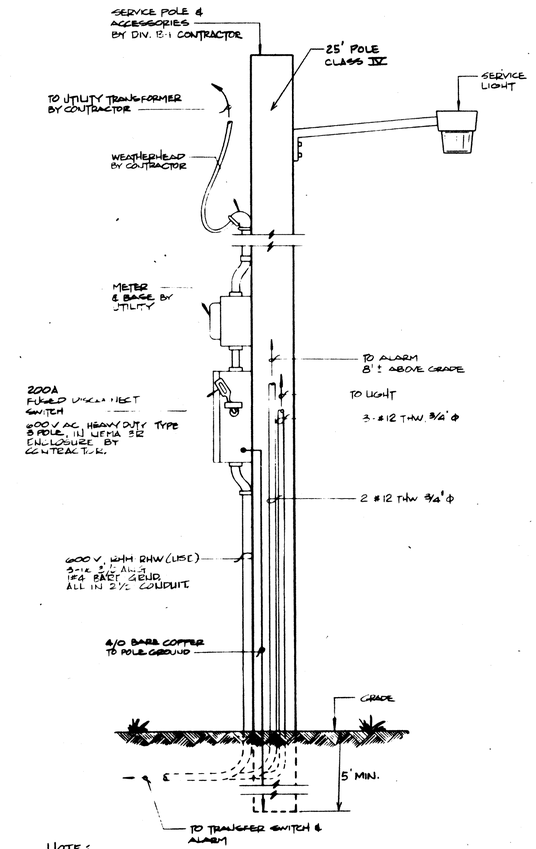

NOTE: SEE SITE PLAN FOR POLE LOCATIONS

SERVICE POLE

NOT TO SCALE

HIGH WATER ALARM SCHEMATIC

NOT TO SCALE

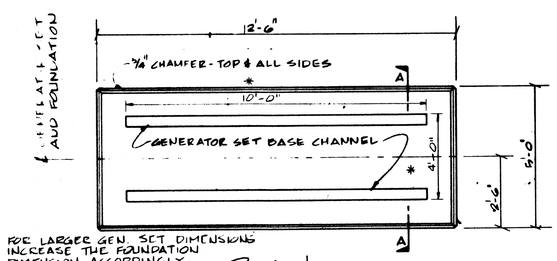

PLAN

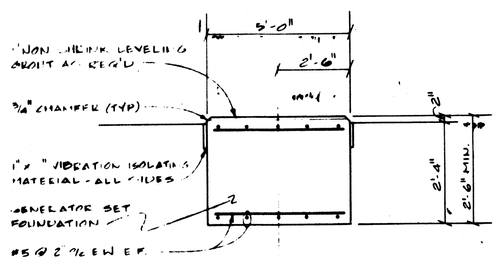

SECTION 'A-A'

GENERATOR SET FOUNDATION

SCALE: NONE

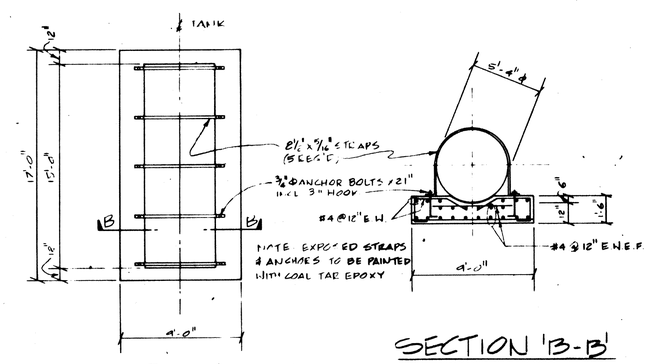

PLAN

SECTION 'B-B'

1000 GALLON TANK PAD

NOT TO SCALE

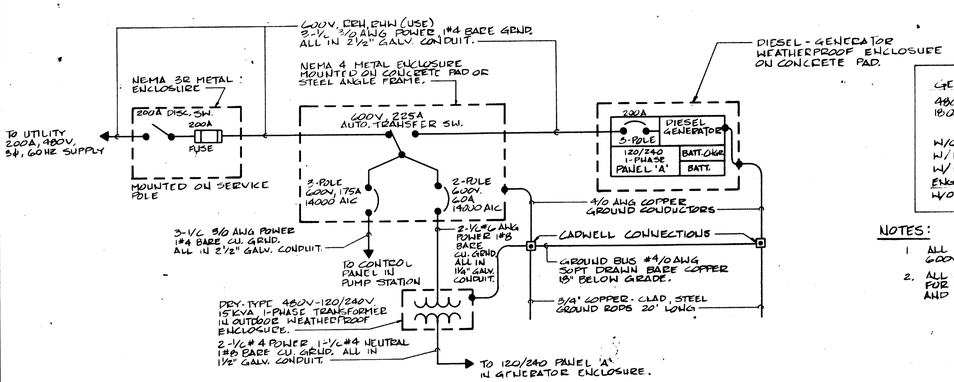

ONE-LINE DIAGRAM

NOT TO SCALE

GENERATOR RATING		
480V, 3 PH, 4W, 60HZ		
1800 RPM, .8 PF		
	STAND-BY	PRIME
W/O FAN	130 KW	110 KW
W/ FAN	125 KW	105 KW
W/ FAN	156 KW	131 KW
ENGINE HP		
W/O FAN	195 HP	165 HP

NOTES:

1. ALL CABLE BY CONTRACTOR TO BE 600V, RHW-RHW (USE) TYPE
2. ALL CONCRETE PADS AND ANGLE FRAMES FOR EQUIPMENT MOUNTING TO BE FURNISHED AND INSTALLED BY THIS CONTRACTOR.

NORTH CAROLINA PROFESSIONAL SEAL 8853 ENGINEER MERLIN J. ADAMS

NORTH CAROLINA REGISTERED PROFESSIONAL ENGINEER SEAL 9/10/81 TROY A. DOBYNS

REVISIONS			
NO.	DATE	NO.	DATE

DESCRIPTION: DUTCH BUFFALO CREEK PUMP STATION #1-A ELECTRICAL
GENERATOR & TANK FOUNDATIONS
DATE: SCALES: NONE
DRAWN BY: PJ TRACED BY: CHECKED BY:

CONT. NO. 0019 B-1

PEIRSON & WHITMAN INCORPORATED CONSULTING ENGINEERS RALEIGH, N. C.

SHEET NO. 17 OF 39 SHEETS

CLIENT: BOARD OF LIGHT & WATER COMMISSIONERS CONCORD, NORTH CAROLINA

EPA NO. 370382

CASE BLUEPRINT & SUPPLY CO. NO9137

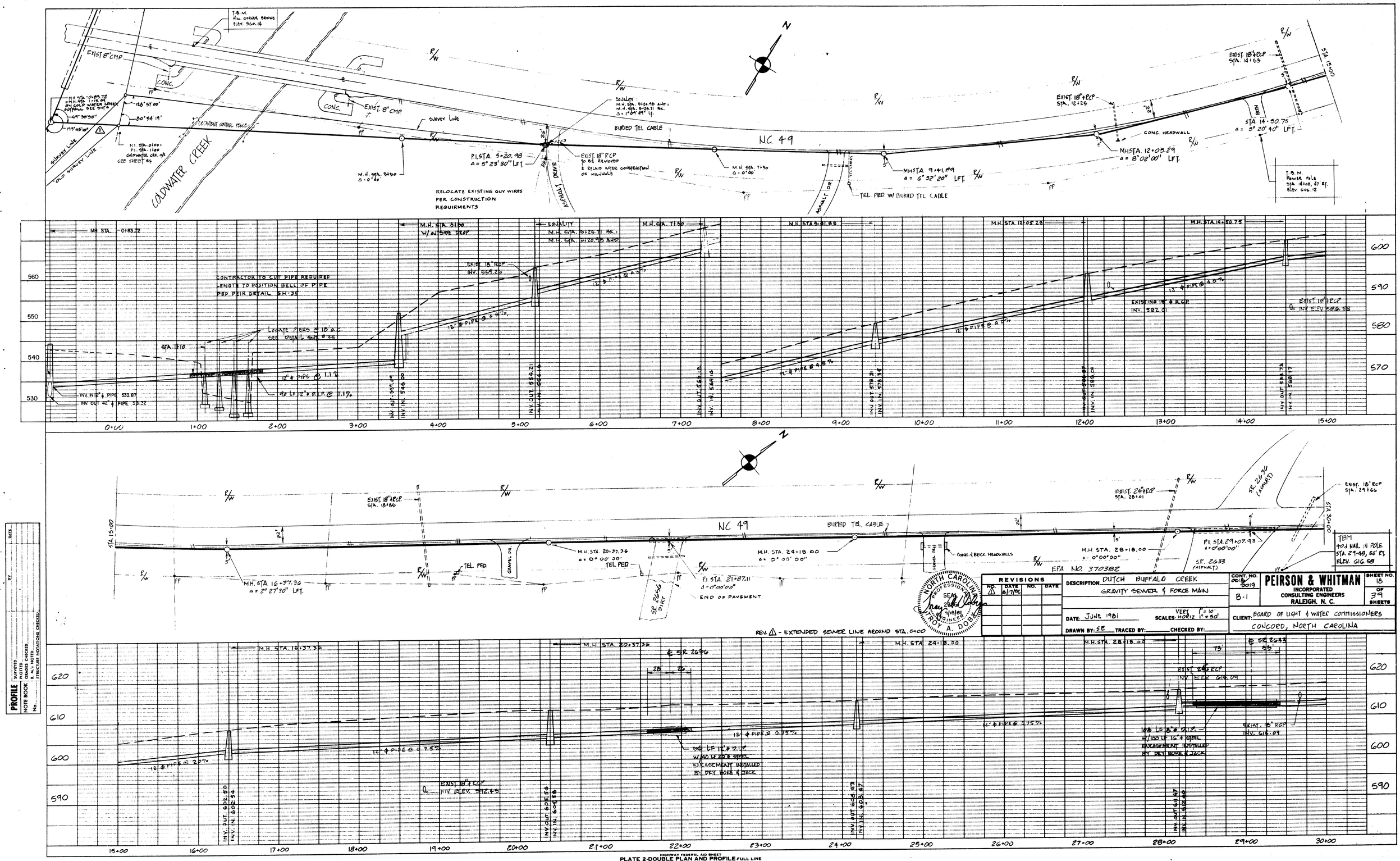

REVISIONS			
NO.	DATE	NO.	DATE
△1	8/17/82		

DESCRIPTION: DUTCH BUFFALO CREEK
GRAVITY SEWER & FORCE MAIN

DATE: JUNE 1981
SCALES: HORIZ. 1" = 50' VERT. 1" = 10'
DRAWN BY: SE TRACED BY: CHECKED BY:

CONT. NO. 0018 / 0019
B-1

PEIRSON & WHITMAN
INCORPORATED
CONSULTING ENGINEERS
RALEIGH, N. C.

SHEET NO. 18 OF 39 SHEETS

CLIENT: BOARD OF LIGHT & WATER COMMISSIONERS
CONCORD, NORTH CAROLINA

PROFILE
SURVEYED
PLOTTED
NOTE BOOK
GRADES CHECKED
B.M.'S NOTED
STRUCTURE LOCATIONS CHECKED
No.
BY
DATE

HIGHWAY FEDERAL AID SHEET
PLATE 2-DOUBLE PLAN AND PROFILE-FULL LINE
TELEDYNE
PRINTED IN U.S.A.

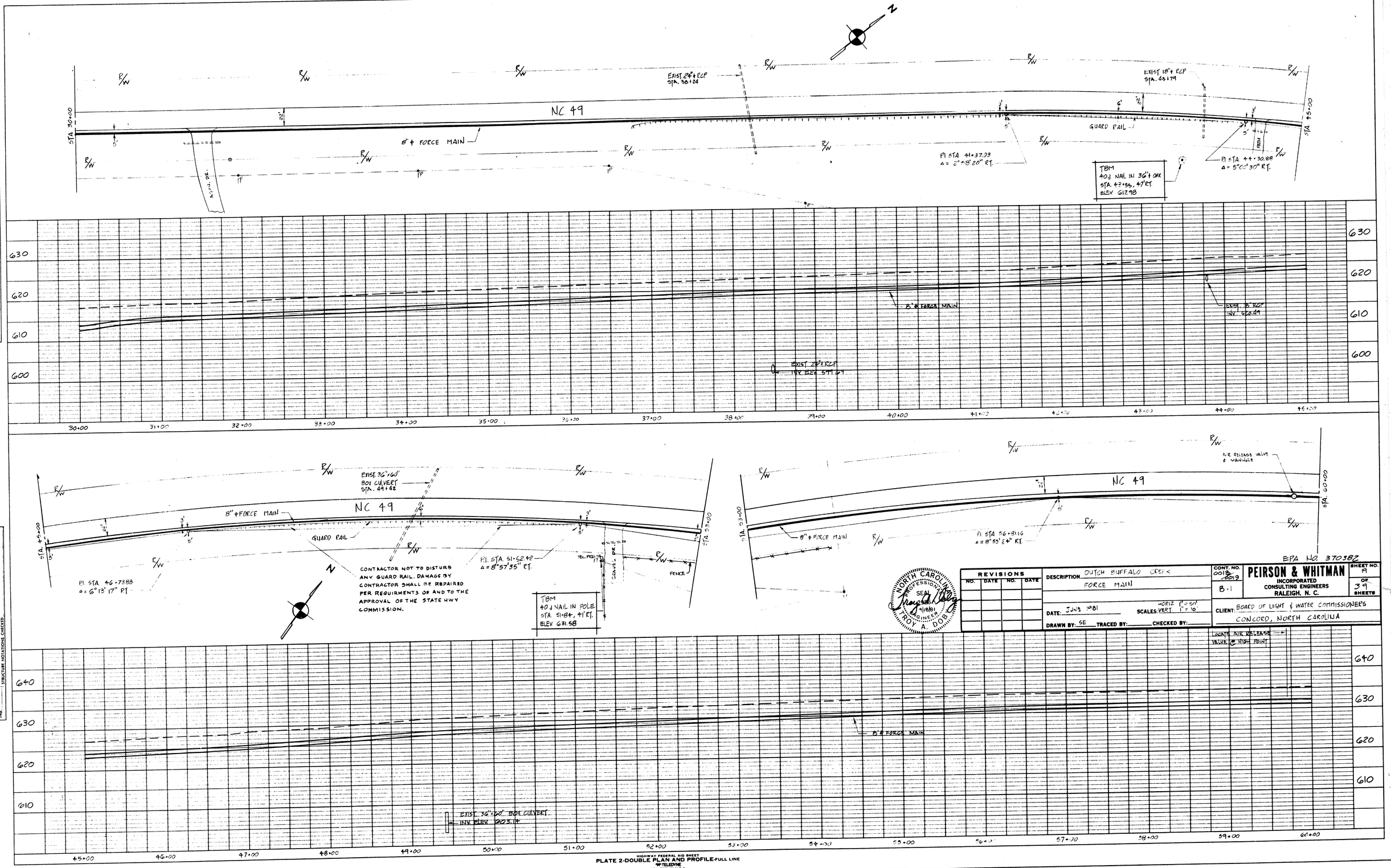

REVISIONS			
NO.	DATE	NO.	DATE

DESCRIPTION: DUTCH BUFFALO CREEK FORCE MAIN

DATE: JUNE 1981 SCALES: HORIZ 1" = 50' VERT 1" = 10'

DRAWN BY: SE TRACED BY: CHECKED BY:

NORTH CAROLINA PROFESSIONAL SEAL ENGINEER ROY A. DOBBS 7/10/81

CONT. NO. 0018-2019

B-1

SHEET NO. A OF 39 SHEETS

PEIRSON & WHITMAN
INCORPORATED
CONSULTING ENGINEERS
RALEIGH, N. C.

EPA NO. 370382

CLIENT: BOARD OF LIGHT & WATER COMMISSIONERS
CONCORD, NORTH CAROLINA

PLAN SURVEYED ___ PLOTTED ___ ALIGNMENT CHECKED ___ RT. OF WAY CHECKED ___ NOTE BOOK ___ No. ___ BY ___ DATE ___

PROFILE SURVEYED ___ PLOTTED ___ GRADES CHECKED ___ ALL STRUCTURES PLOTTED ___ STRUCTURE NOTATIONS CHECKED ___ NOTE BOOK ___ No. ___ BY ___ DATE ___

HIGHWAY FEDERAL AID SHEET
PLATE 2-DOUBLE PLAN AND PROFILE-FULL LINE
TELEDYNE
PRINTED IN U.S.A.

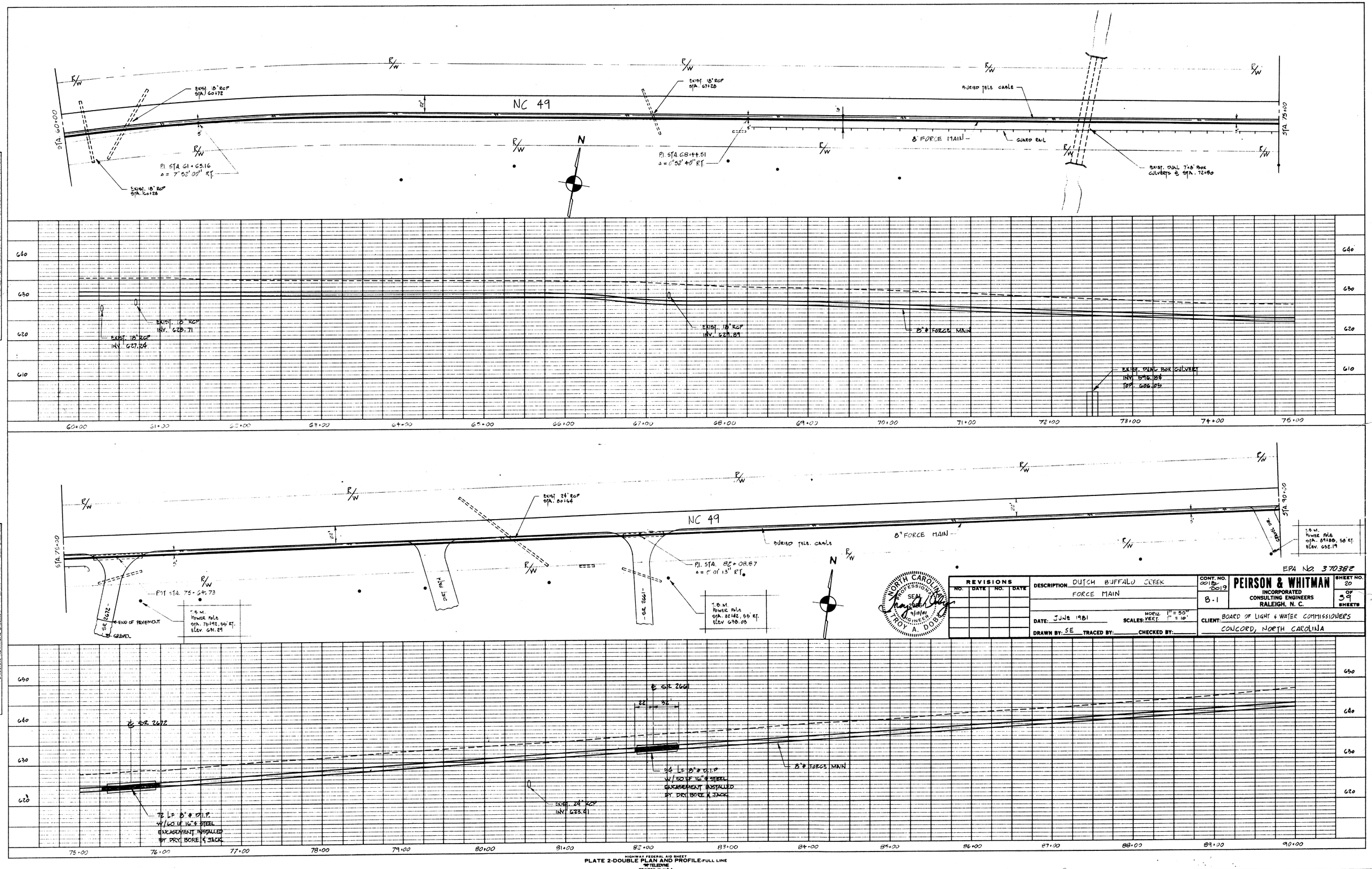

PLAN — SURVEYED / PLOTTED / NOTE BOOK / ALIGNMENT CHECKED / R/W OF WAY CHECKED / No. / BY: / DATE

PROFILE — SURVEYED / PLOTTED / NOTE BOOK / GRADES CHECKED / B.M.'s NOTED / STRUCTURE NOTATIONS CHECKED / No. / BY: / DATE

EPA No. 370382

REVISIONS			
NO.	DATE	NO.	DATE

DESCRIPTION: DUTCH BUFFALO CREEK FORCE MAIN

DATE: JUNE 1981 — SCALES: HORIZ. 1" = 50' VERT. 1" = 10' — DRAWN BY: SE — TRACED BY: — CHECKED BY:

CONT. NO. 0018 2019 — B-1

PEIRSON & WHITMAN INCORPORATED CONSULTING ENGINEERS RALEIGH, N. C.

SHEET NO. 20 OF 39 SHEETS

CLIENT: BOARD OF LIGHT & WATER COMMISSIONERS CONCORD, NORTH CAROLINA

HIGHWAY FEDERAL AID SHEET
PLATE 2-DOUBLE PLAN AND PROFILE-FULL LINE
TELEDYNE
PRINTED IN U.S.A.

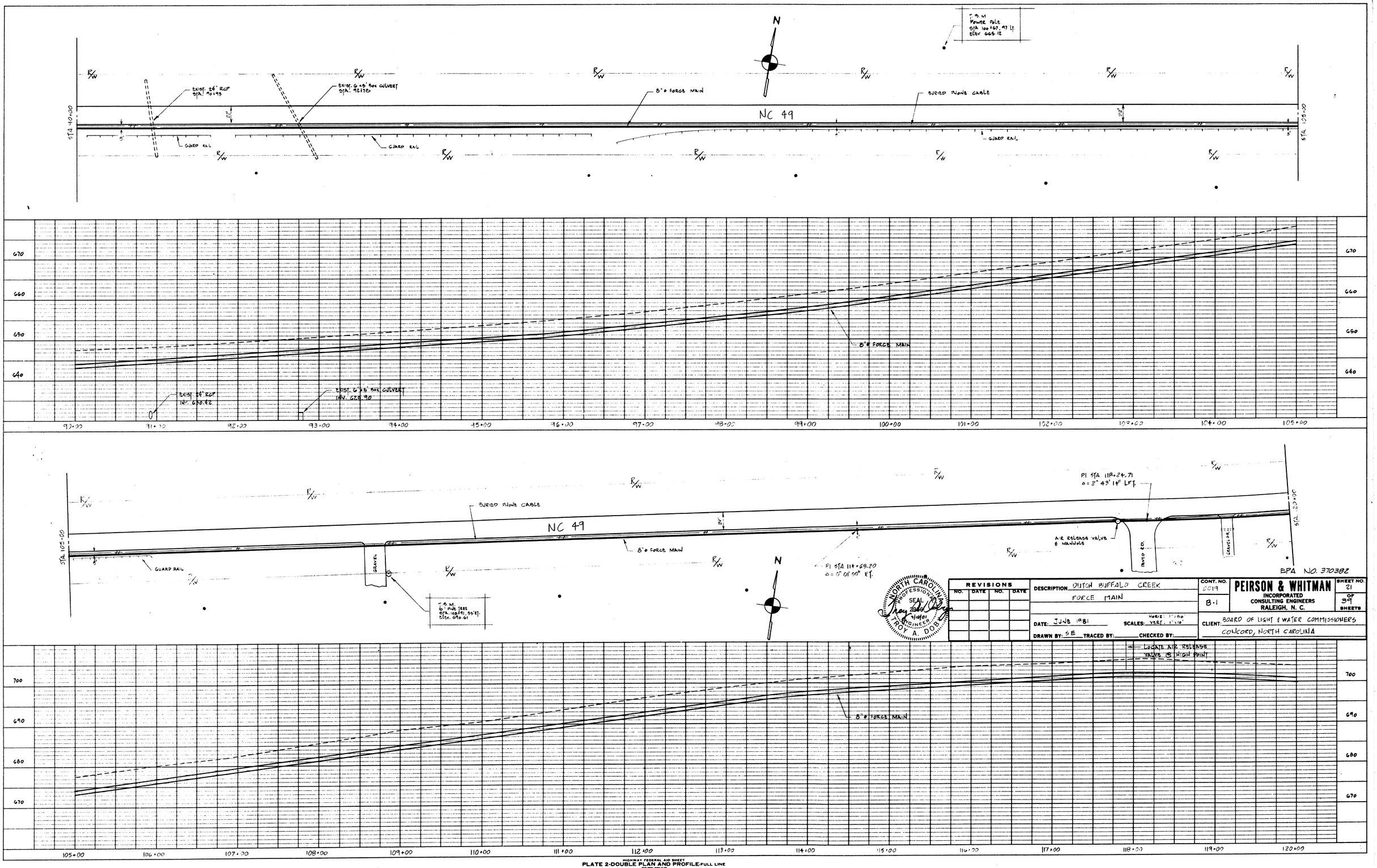

PLAN SURVEYED ____ BY ____ DATE ____
NOTE BOOK PLOTTED ____ ALIGNMENT CHECKED ____
No. ____ RT. OF WAY CHECKED ____

PROFILE SURVEYED ____ BY ____ DATE ____
NOTE BOOK PLOTTED ____ GRADES CHECKED ____
No. ____ R/W PLOTTED ____ STRUCTURE NOTATIONS CHECKED ____

REVISIONS			
NO.	DATE	NO.	DATE

DESCRIPTION: DUTCH BUFFALO CREEK FORCE MAIN

DATE: JUNE 1981 SCALES: HORIZ. 1" = 50' VERT. 1" = 10'

DRAWN BY: SE TRACED BY: CHECKED BY:

NORTH CAROLINA PROFESSIONAL SEAL 20869 ENGINEER TROY A. DOBBS 7/10/81

CONT. NO. 2019 B-1

PEIRSON & WHITMAN
INCORPORATED
CONSULTING ENGINEERS
RALEIGH, N. C.

SHEET NO. 21 OF 39 SHEETS

CLIENT: BOARD OF LIGHT & WATER COMMISSIONERS
CONCORD, NORTH CAROLINA

HIGHWAY FEDERAL AID SHEET
PLATE 2-DOUBLE PLAN AND PROFILE-FULL LINE
TELEDYNE
PRINTED IN U.S.A.

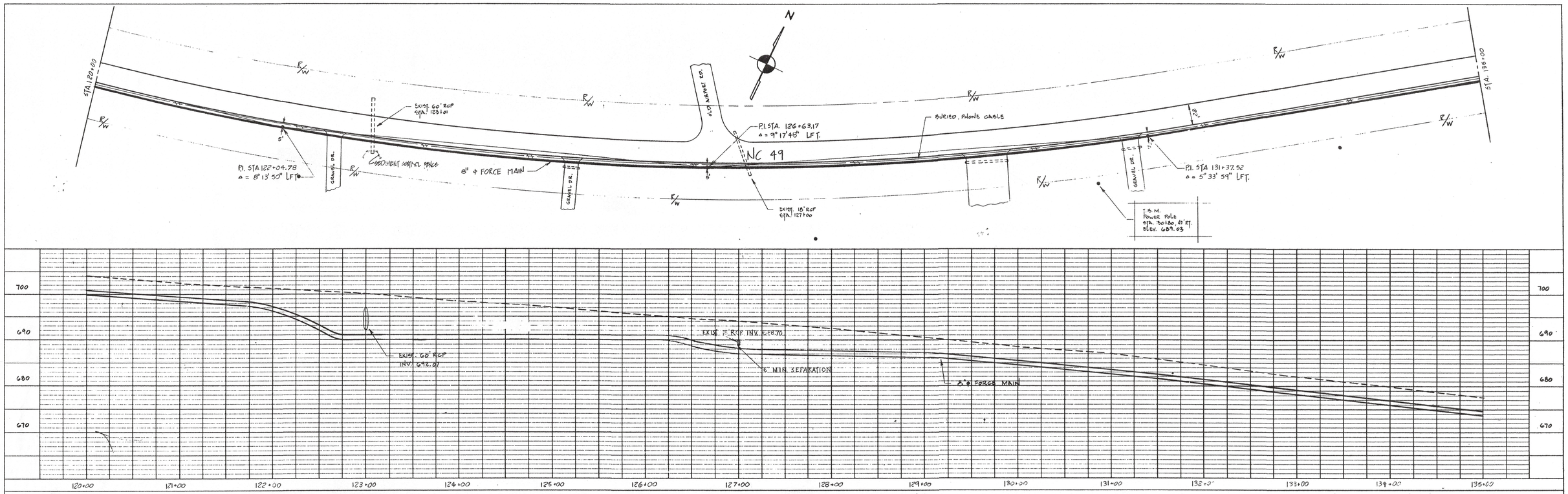

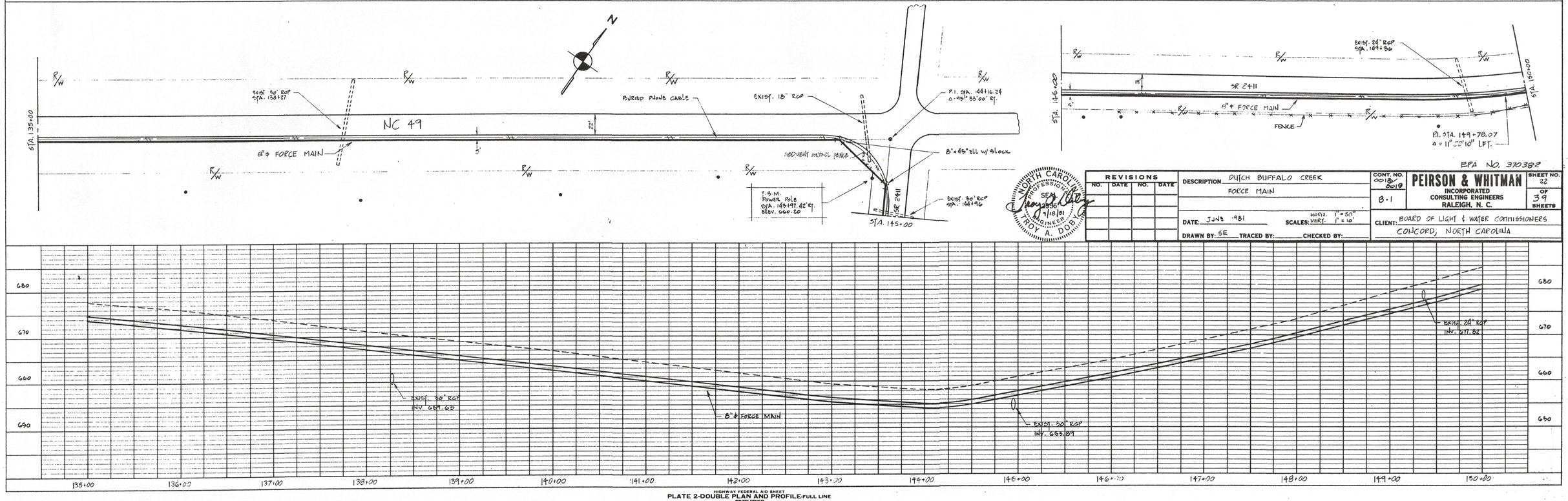

PLAN
SURVEYED ____ DATE ____
PLOTTED ____ BY ____
NOTE BOOK ____ ALIGNMENT CHECKED ____
No. ____ RT. OF WAY CHECKED ____

PROFILE
SURVEYED ____ DATE ____
PLOTTED ____ BY ____
NOTE BOOK ____ GRADES CHECKED ____
No. ____ B. M.'s NOTED ____
STRUCTURE NOTATIONS CHECKED ____

NORTH CAROLINA PROFESSIONAL SEAL ENGINEER 7/18/81 TROY A. DOBBS

REVISIONS			
NO.	DATE	NO.	DATE

DESCRIPTION: DUTCH BUFFALO CREEK FORCE MAIN

DATE: JUNE 1981 SCALES: HORIZ. 1" = 50" VERT. 1" = 10'

DRAWN BY: SE TRACED BY: ____ CHECKED BY: ____

CONT. NO. 0018-8019 B-1

PEIRSON & WHITMAN
INCORPORATED
CONSULTING ENGINEERS
RALEIGH, N. C.

SHEET NO. 22 OF 39 SHEETS

CLIENT: BOARD OF LIGHT & WATER COMMISSIONERS
CONCORD, NORTH CAROLINA

EPA NO. 370382

HIGHWAY FEDERAL AID SHEET
PLATE 2-DOUBLE PLAN AND PROFILE-FULL LINE
TELEDYNE
PRINTED IN U.S.A.

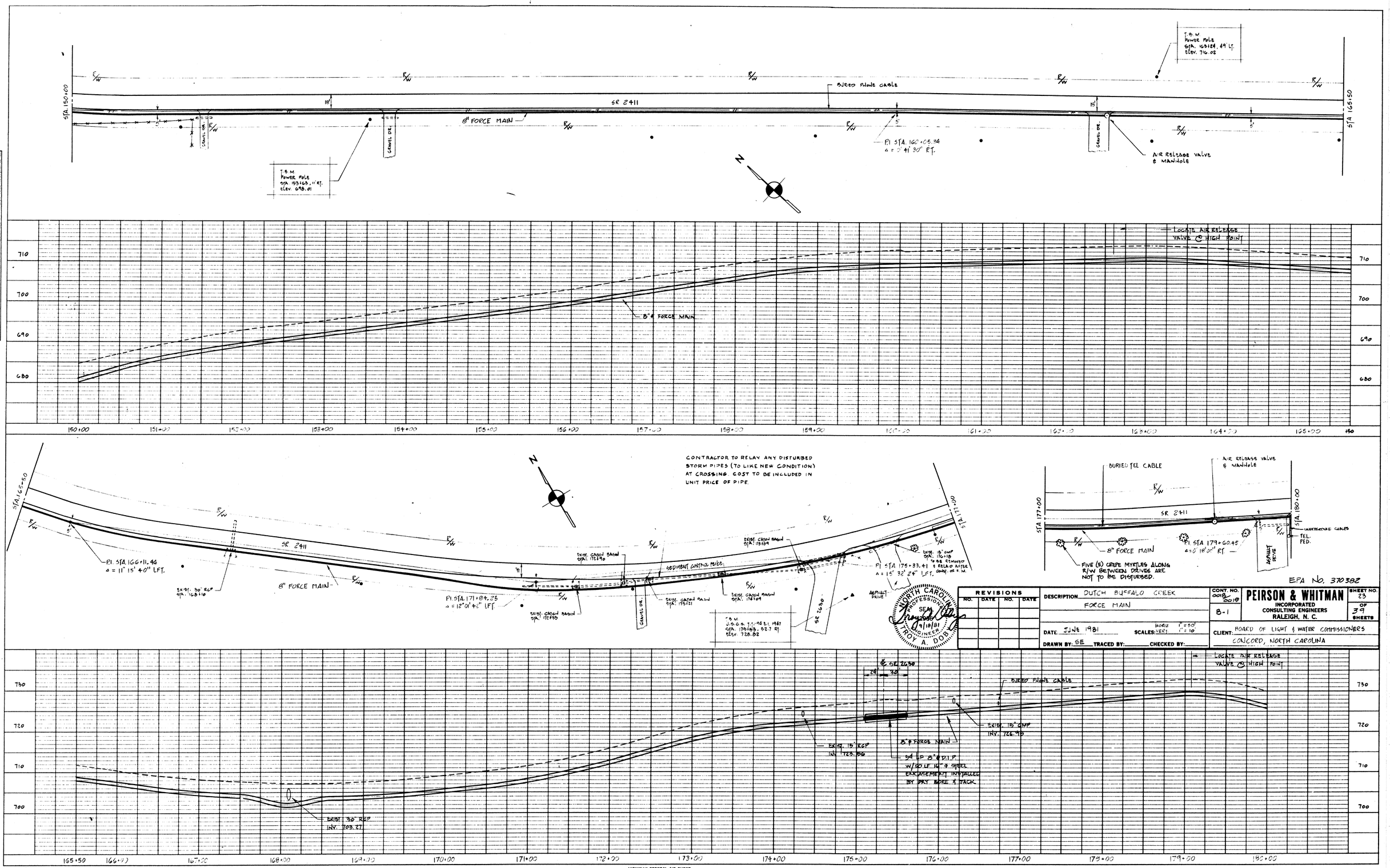

REVISIONS			
NO.	DATE	NO.	DATE

DESCRIPTION: DUTCH BUFFALO CREEK FORCE MAIN

DATE: JUNE 1981 SCALES: HORIZ. 1" = 50' VERT. 1" = 10

DRAWN BY: SE TRACED BY: CHECKED BY:

CONT. NO. 0018 0019

B-1

PEIRSON & WHITMAN
INCORPORATED
CONSULTING ENGINEERS
RALEIGH, N. C.

SHEET NO. 23 OF 39 SHEETS

CLIENT: BOARD OF LIGHT & WATER COMMISSIONERS
CONCORD, NORTH CAROLINA

PLAN
SURVEYED
PLOTTED
NOTE BOOK ALIGNMENT CHECKED
No. RT. OF WAY CHECKED
BY: DATE:

PROFILE
SURVEYED
PLOTTED
NOTE BOOK GRADES CHECKED
B.M.'s NOTED
No. STRUCTURE NOTATIONS CHECKED
BY: DATE:

HIGHWAY FEDERAL AID SHEET
PLATE 2-DOUBLE PLAN AND PROFILE-FULL LINE
TELEDYNE
PRINTED IN U.S.A.

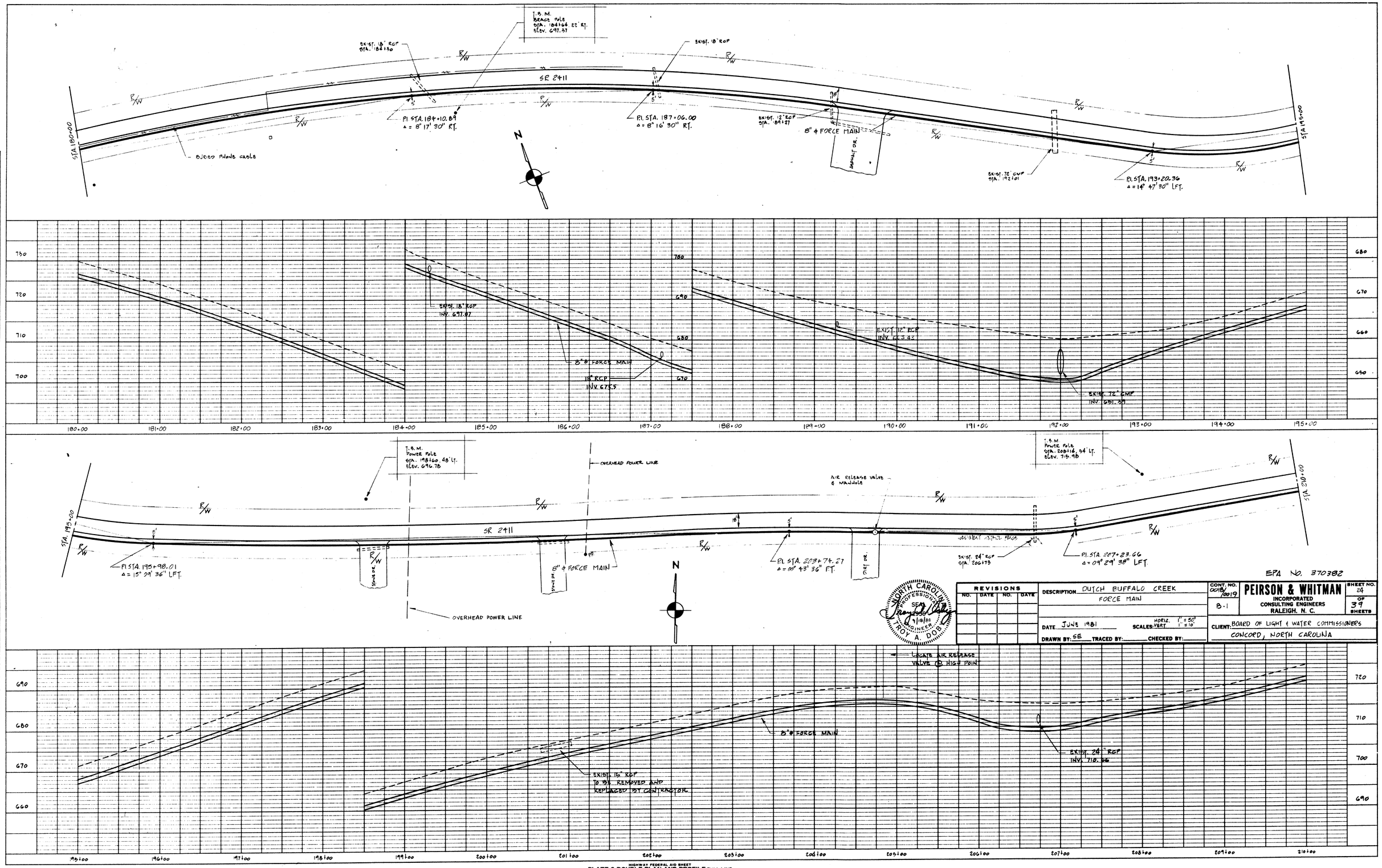

EPA NO. 370382

REVISIONS			
NO.	DATE	NO.	DATE

DESCRIPTION: DUTCH BUFFALO CREEK FORCE MAIN

DATE: JUNE 1981 SCALES: HORIZ. 1" = 50' VERT. 1" = 10'

DRAWN BY: SE TRACED BY: CHECKED BY:

CONT. NO. 0018/0019 B-1

PEIRSON & WHITMAN
INCORPORATED
CONSULTING ENGINEERS
RALEIGH, N. C.

SHEET NO. 24 OF 39 SHEETS

CLIENT: BOARD OF LIGHT & WATER COMMISSIONERS
CONCORD, NORTH CAROLINA

NORTH CAROLINA PROFESSIONAL SEAL ENGINEER TROY A. DOBBS 9/18/81

PLAN
SURVEYED
PLOTTED
ALIGNMENT CHECKED
RT. OF WAY CHECKED
NOTE BOOK
No.
BY
DATE

PROFILE
SURVEYED
PLOTTED
GRADES CHECKED
R/W CHECKED
STRUCTURE NOTATIONS CHECKED
NOTE BOOK
No.
BY
DATE

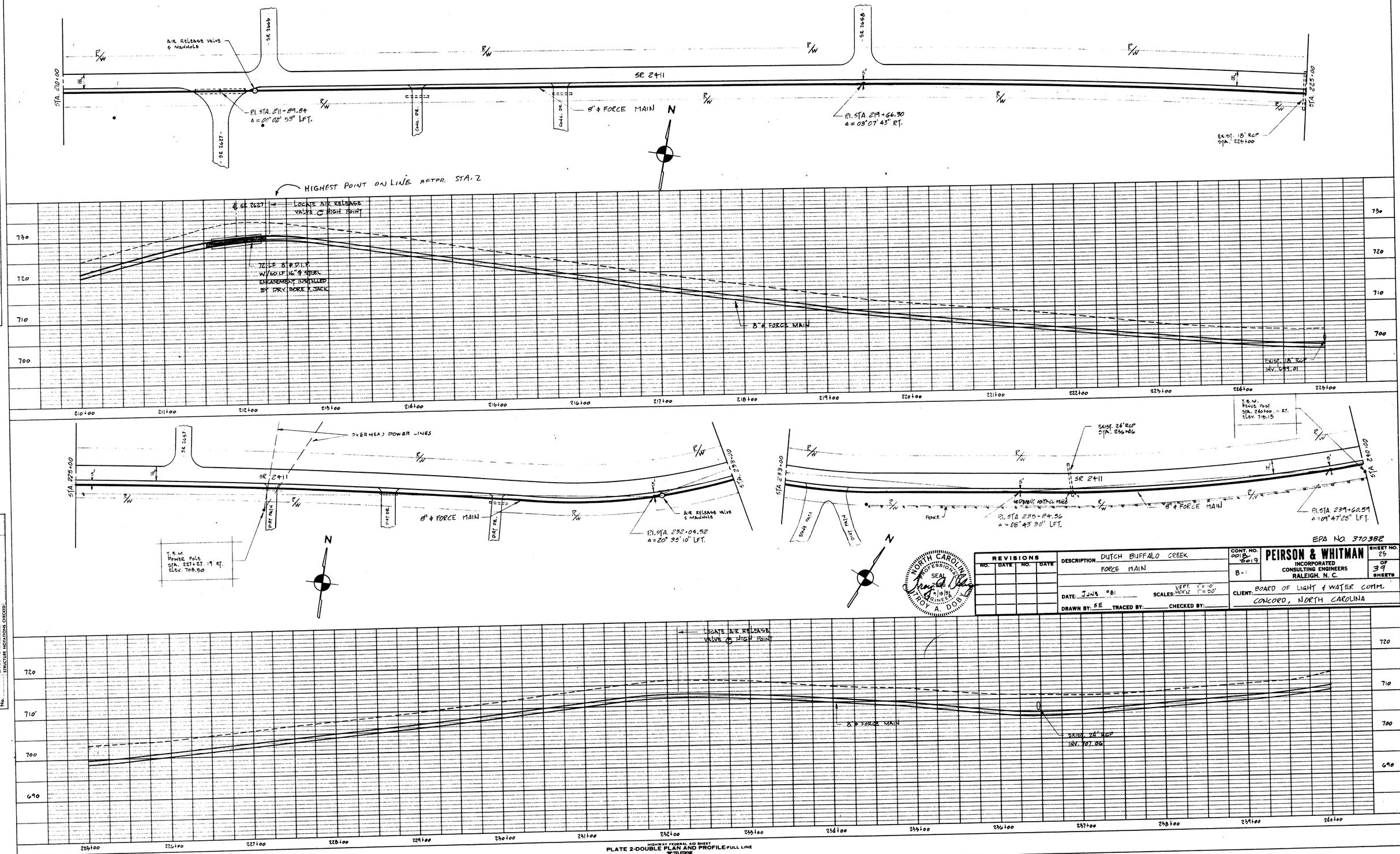

PLAN
SURVEYED
PLOTTED
NOTE BOOK
PROFILE NOT CHECKED
RT. OF WAY CHECKED
No.
DATE
BY

PROFILE
SURVEYED
PLOTTED
NOTE BOOK
GRADES CHECKED
B. M.'s NOTED
STRUCTURE NOTATIONS CHECKED
No.
DATE
BY

EPA NO. 370382

NORTH CAROLINA PROFESSIONAL SEAL 2686 8/8/81 ENGINEER ROY A. DOBY

REVISIONS			
NO.	DATE	NO.	DATE

DESCRIPTION: DUTCH BUFFALO CREEK FORCE MAIN

DATE: JUNE '81 SCALES: VERT. 1" = 10' HORIZ. 1" = 50'

DRAWN BY: SE TRACED BY: CHECKED BY:

CONT. NO. 2018-8019 B-1

PEIRSON & WHITMAN
INCORPORATED
CONSULTING ENGINEERS
RALEIGH, N. C.

SHEET NO. 23 OF 39 SHEETS

CLIENT: BOARD OF LIGHT & WATER COMM.
CONCORD, NORTH CAROLINA

HIGHWAY FEDERAL AID SHEET
PLATE 2-DOUBLE PLAN AND PROFILE-FULL LINE
TELEDYNE
PRINTED IN U.S.A.

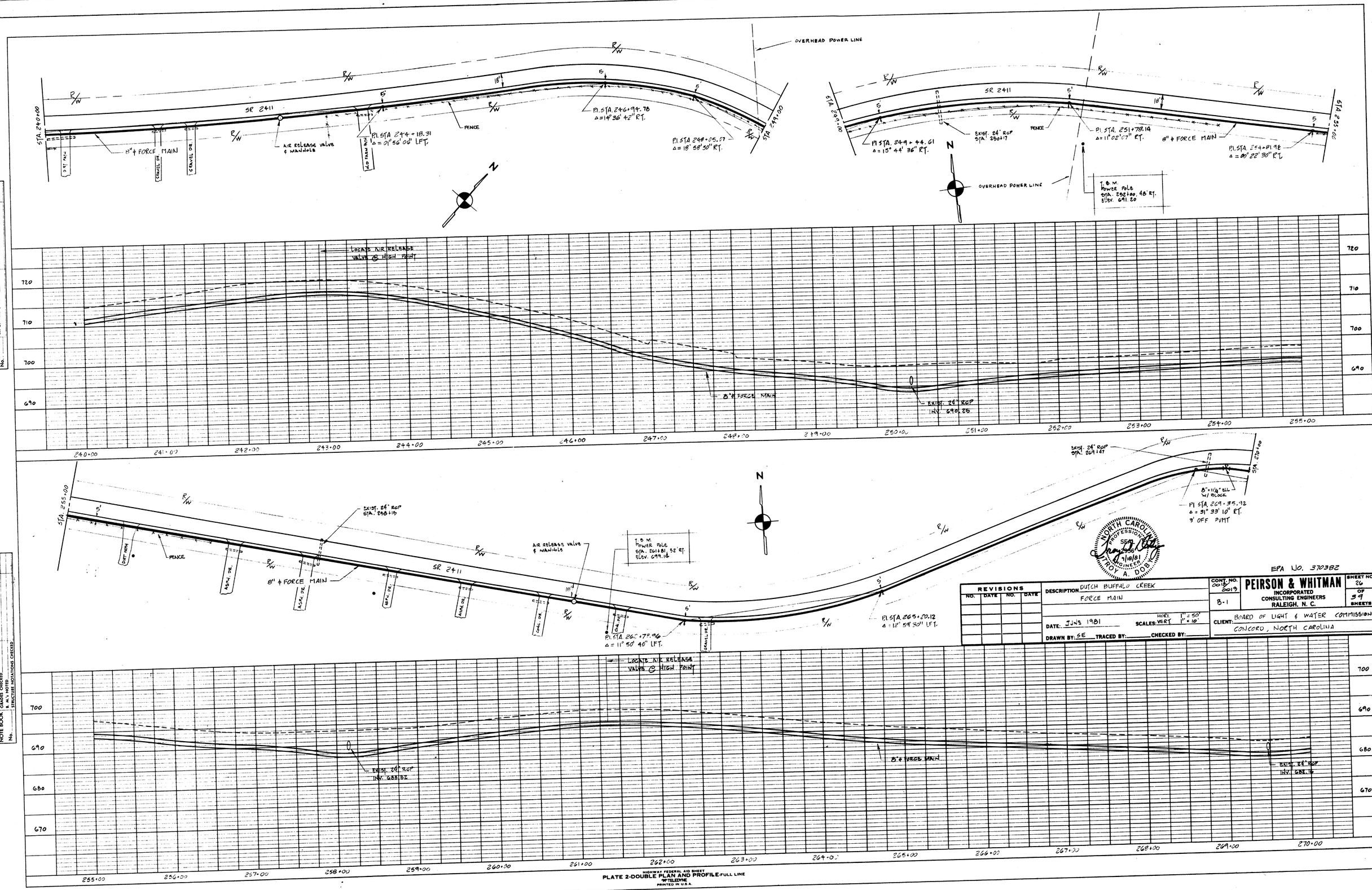

REVISIONS			
NO.	DATE	NO.	DATE

DESCRIPTION: DUTCH BUFFALO CREEK FORCE MAIN

DATE: JUNE 1981 SCALES: HORI. 1" = 50' VERT. 1" = 10'

DRAWN BY: SE TRACED BY: CHECKED BY:

CONT. NO. 0018-2019 B-1

PEIRSON & WHITMAN
INCORPORATED
CONSULTING ENGINEERS
RALEIGH, N. C.

SHEET NO. 26 OF 39 SHEETS

CLIENT: BOARD OF LIGHT & WATER COMMISSIONERS
CONCORD, NORTH CAROLINA

PLAN SURVEYED / PLOTTED / NOTE BOOK / ALIGNMENT CHECKED / RT. OF WAY CHECKED / No. / BY / DATE

PROFILE SURVEYED / PLOTTED / NOTE BOOK / GRADES CHECKED / B.M.'s NOTED / STRUCTURE NOTATIONS CHECKED / No. / BY / DATE

HIGHWAY FEDERAL AID SHEET
PLATE 2-DOUBLE PLAN AND PROFILE-FULL LINE
TELEDYNE
PRINTED IN U.S.A.

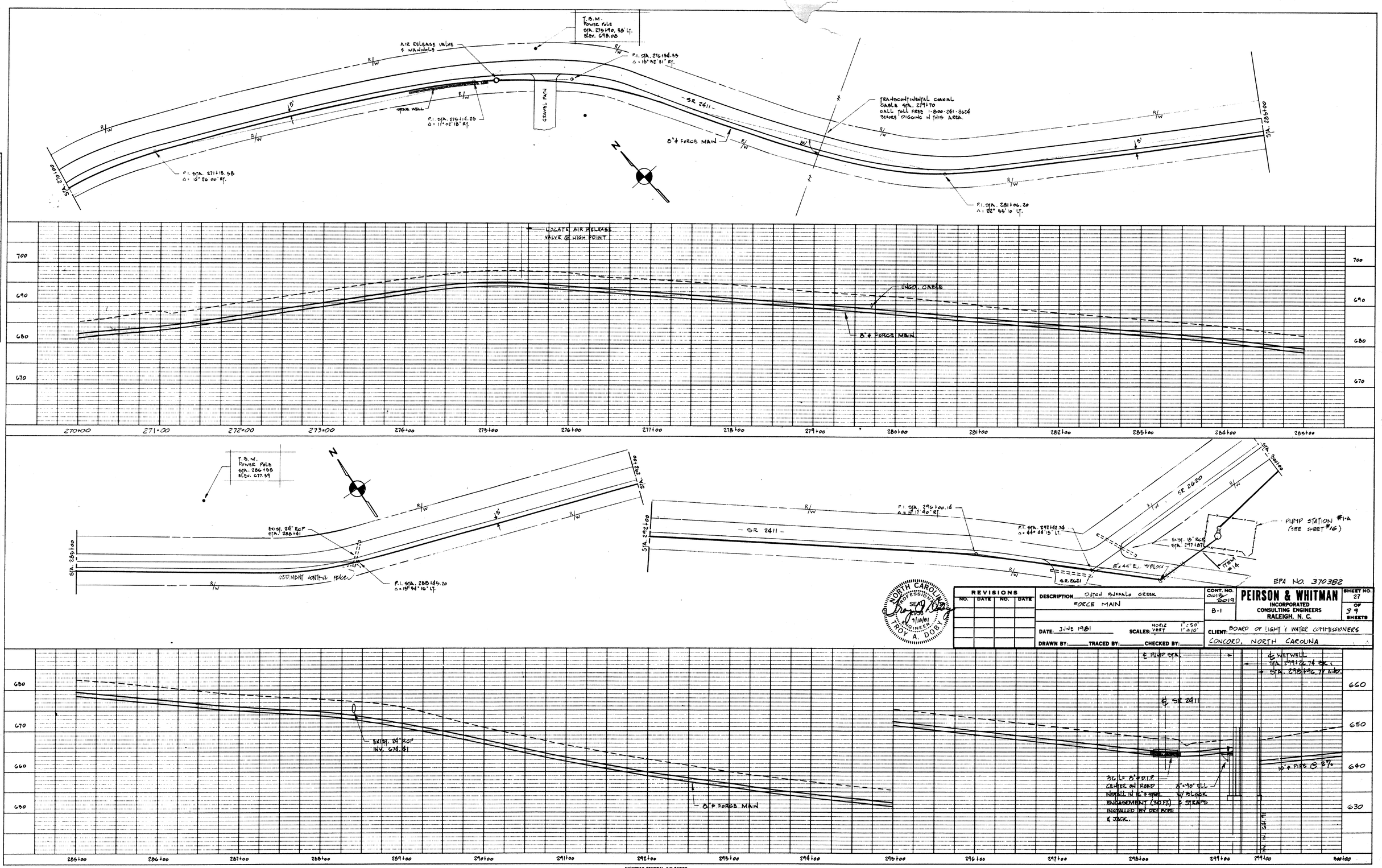

PLAN	SURVEYED	BY	DATE
NOTE BOOK	PLOTTED		
No.	ALIGNMENT CHECKED		
	RT. OF WAY CHECKED		

PROFILE	SURVEYED	BY	DATE
NOTE BOOK	PLOTTED		
No.	GRADES CHECKED		
	R.R. CROSSING		
	STRUCTURE NOTATIONS CHECKED		

NORTH CAROLINA PROFESSIONAL SEAL 3398 ENGINEER TROY A. DORY 1/10/01

REVISIONS			
NO.	DATE	NO.	DATE

DESCRIPTION: OJUCH BUFFALO CREEK FORCE MAIN

DATE: JUNE 1981 SCALES: HORIZ 1" = 50' VERT 1" = 10'

DRAWN BY: TRACED BY: CHECKED BY:

CONT. NO. 0018C 0019 B-1

PEIRSON & WHITMAN
INCORPORATED
CONSULTING ENGINEERS
RALEIGH, N. C.

SHEET NO. 27 OF 39 SHEETS

CLIENT: BOARD OF LIGHT & WATER COMMISSIONERS
CONCORD, NORTH CAROLINA

EPA NO. 370382

HIGHWAY FEDERAL AID SHEET
PLATE 2-DOUBLE PLAN AND PROFILE-FULL LINE
TELEDYNE
PRINTED IN U.S.A.

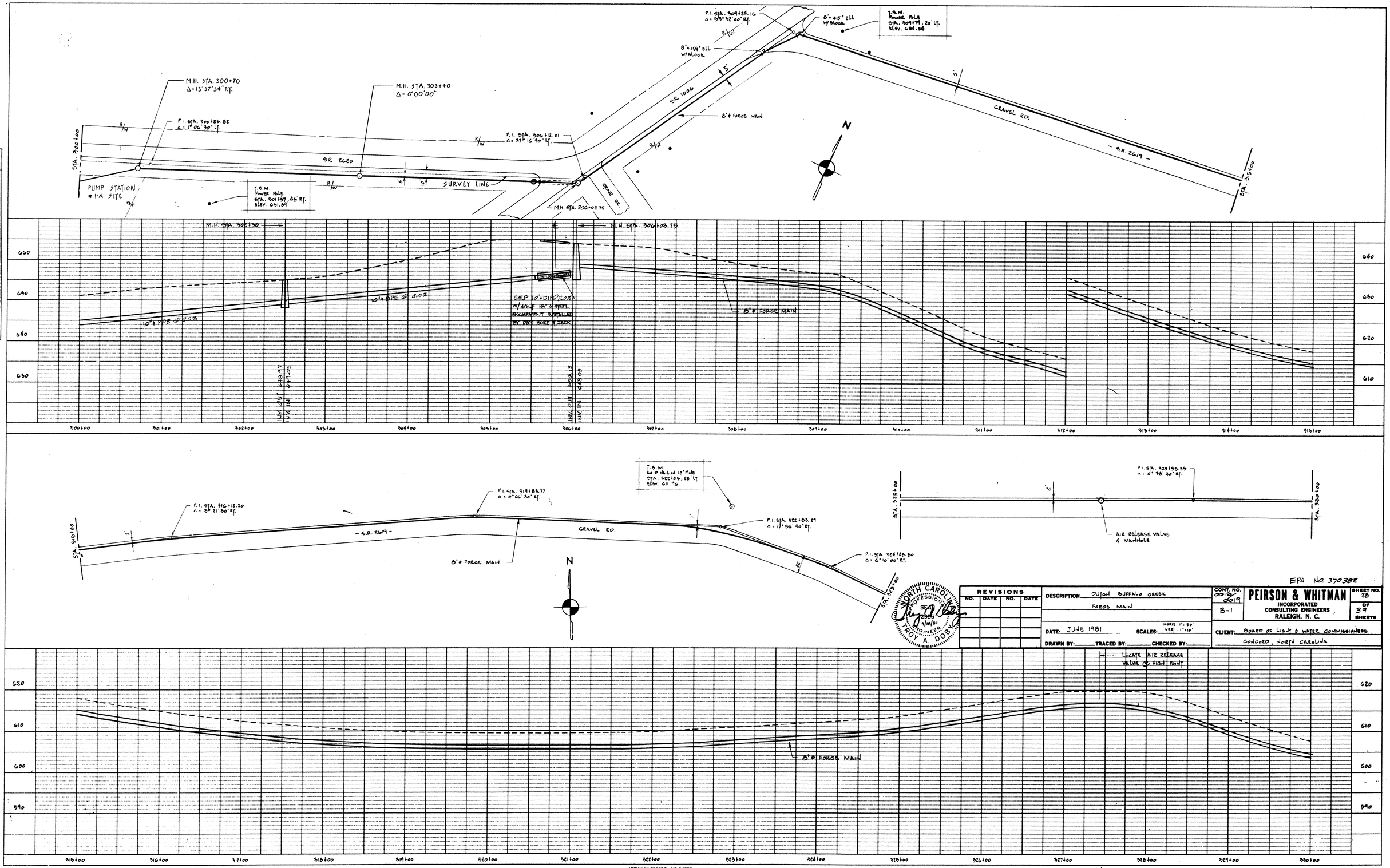

PLAN		BY	DATE
NOTE BOOK	SURVEYED		
	PLOTTED		
	RIGHT OF WAY CHECKED		
No.			

PROFILE		BY	DATE
NOTE BOOK	SURVEYED		
	PLOTTED		
	GRADES CHECKED		
No.	B.M.'s NOTED		
	STRUCTURE NOTATIONS CHECKED		

EPA No 370388

REVISIONS			
NO.	DATE	NO.	DATE

DESCRIPTION: OUTCH BUFFALO CREEK
FORCE MAIN

DATE: JUNE 1981 SCALES: HORIZ. 1" = 50' VERT. 1" = 10'

DRAWN BY: TRACED BY: CHECKED BY:

CONT. NO. 0018 2019 B-1

PEIRSON & WHITMAN
INCORPORATED
CONSULTING ENGINEERS
RALEIGH, N. C.

SHEET NO. 28 OF 39 SHEETS

CLIENT: BOARD OF LIGHT & WATER COMMISSIONERS
CONCORD, NORTH CAROLINA

NORTH CAROLINA PROFESSIONAL SEAL 5866 ENGINEER TROY A. DOBBS 7/10/81

HIGHWAY FEDERAL AID SHEET
PLATE 2-DOUBLE PLAN AND PROFILE-FULL LINE
TELEDYNE
PRINTED IN U.S.A.

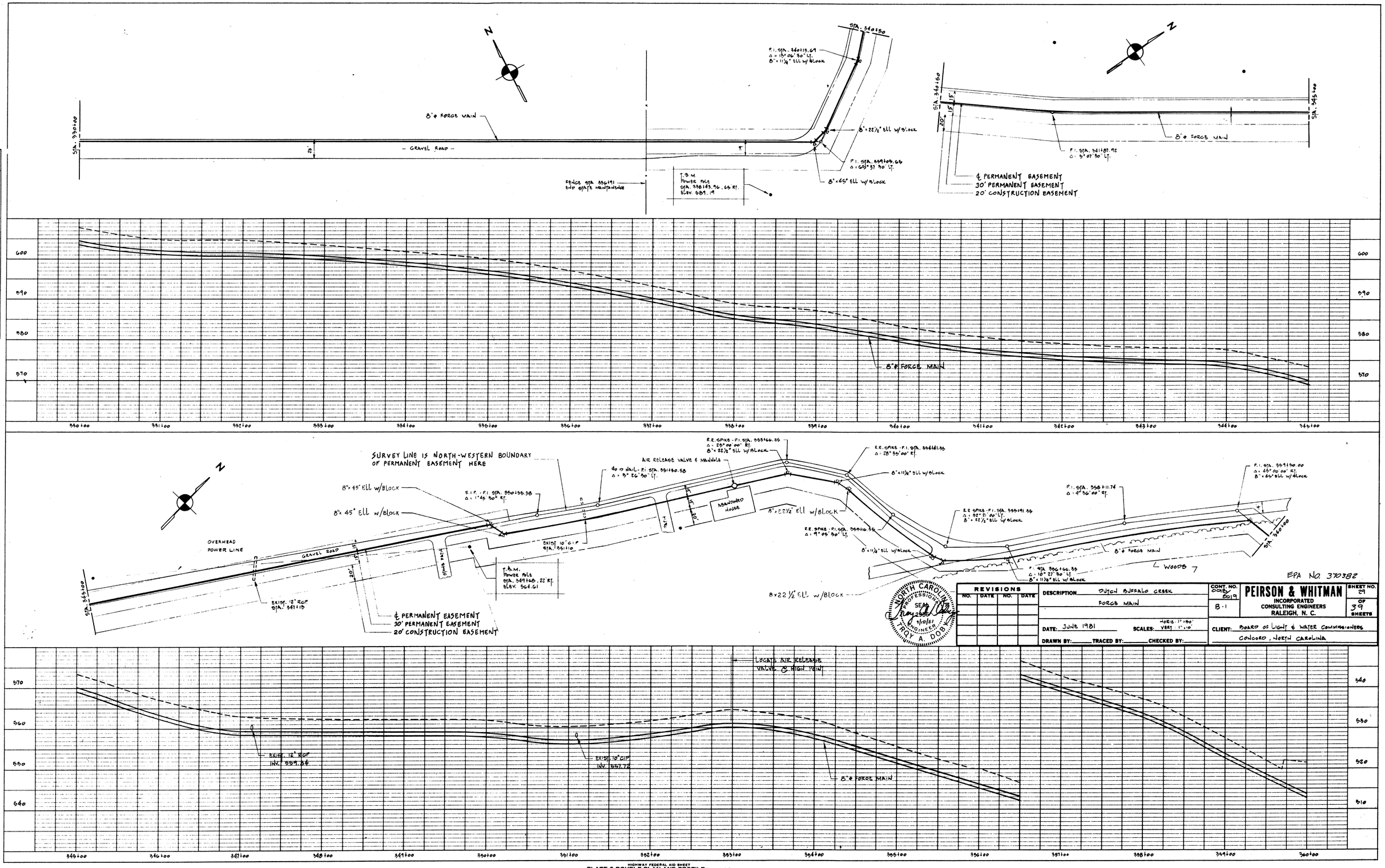

EPA NO. 370382

NORTH CAROLINA PROFESSIONAL SEAL 2666 ENGINEER TROY A. DOB 1/18/81

REVISIONS			
NO.	DATE	NO.	DATE

DESCRIPTION: DUTCH BUFFALO CREEK FORCE MAIN

DATE: JUNE 1981 SCALES: HORIZ. 1" = 50' VERT. 1" = 10'

DRAWN BY: TRACED BY: CHECKED BY:

CONT. NO. 0989/8519 B-1

PEIRSON & WHITMAN
INCORPORATED
CONSULTING ENGINEERS
RALEIGH, N. C.

SHEET NO. 29 OF 39 SHEETS

CLIENT: BOARD OF LIGHT & WATER COMMISSIONERS
CONCORD, NORTH CAROLINA

PLAN — SURVEYED, PLOTTED, ALIGNMENT CHECKED, BY: OK'D WAY CHECKED, NOTE BOOK, No., BY, DATE

PROFILE — SURVEYED, PLOTTED, GRADES CHECKED, & NOTED, STRUCTURE NOTATIONS CHECKED, NOTE BOOK, No., BY, DATE

HIGHWAY FEDERAL AID SHEET
PLATE 2-DOUBLE PLAN AND PROFILE-FULL LINE
TELEDYNE
PRINTED IN U.S.A.

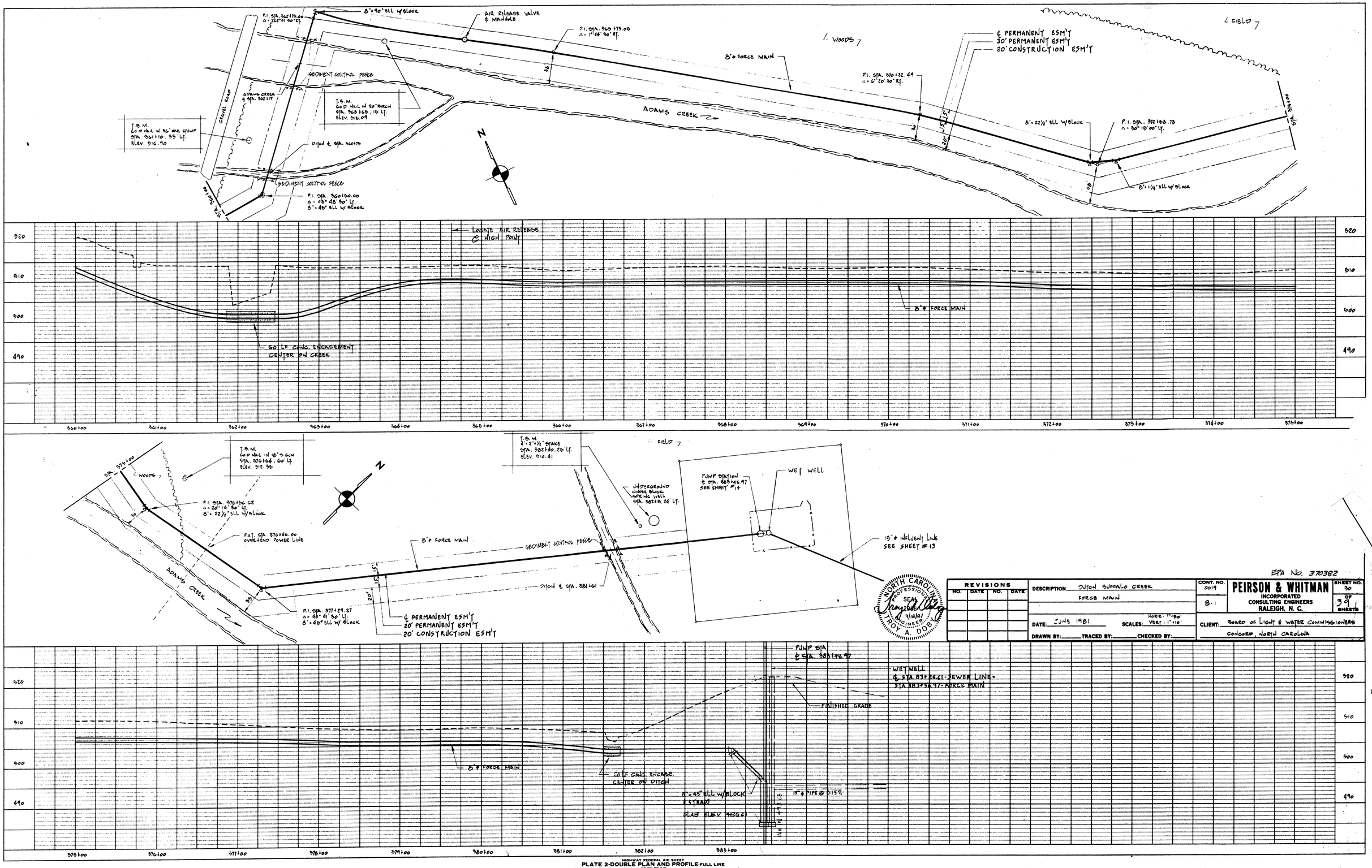

NORTH CAROLINA PROFESSIONAL SEAL ENGINEER TROY A. DOBY 9/18/81

REVISIONS			
NO.	DATE	NO.	DATE

DESCRIPTION: DITCH BUFFALO CREEK FORCE MAIN

DATE: JUNE 1981 SCALES: HORIZ. 1"=50' VERT. 1"=10'

DRAWN BY: TRACED BY: CHECKED BY:

CONT. NO. 0019 B-1

PEIRSON & WHITMAN
INCORPORATED
CONSULTING ENGINEERS
RALEIGH, N. C.

SHEET NO. 30 OF 39 SHEETS

CLIENT: BOARD OF LIGHT & WATER COMMISSIONERS
CONCORD, NORTH CAROLINA

EPA No. 370382

PLAN SURVEYED ___ PLOTTED ___ ALIGNMENT CHECKED ___ RT. OF WAY CHECKED ___ NOTE BOOK: ___ No. ___ BY: ___ DATE: ___

PROFILE SURVEYED ___ PLOTTED ___ GRADES CHECKED ___ B. M.'s NOTED ___ STRUCTURE NOTATIONS CHECKED ___ NOTE BOOK ___ No. ___ BY: ___ DATE: ___

HIGHWAY FEDERAL AID SHEET
PLATE 2-DOUBLE PLAN AND PROFILE-FULL LINE
TELEDYNE
PRINTED IN U.S.A.

NOTES

1. MANHOLE STEPS ARE 12" WIDE & 12" ON CENTER. STEPS ARE RUBBER COATED CAST IRON.
2. FORM A SMOOTH FINISHED TROUGH FROM ENTRANCE PIPE TO EXIT PIPE. IN MANHOLES LOCATED AT BENDS, THE TROUGH MUST BE A SMOOTH ARC TANGENT TO THE INSIDE WALLS OF THE PIPES AT THEIR ENDS.
3. ALL PIPE OPENINGS IN PRECAST SECTIONS ARE TO BE NO GREATER THAN 3" LARGER THAN THE O.D. OF THE PIPE INSTALLED. ALL OPENINGS SHALL HAVE ADDITIONAL REINFORCING STEEL.

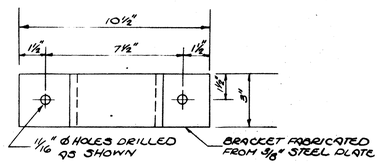

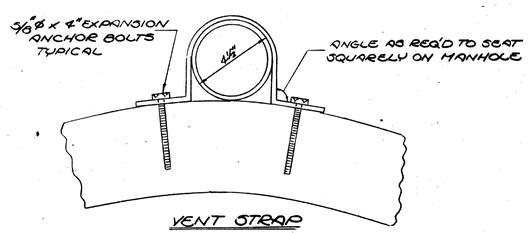

VENT STRAP

NTS

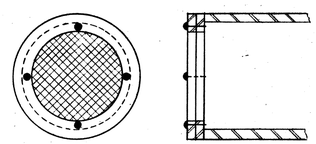

SCREEN

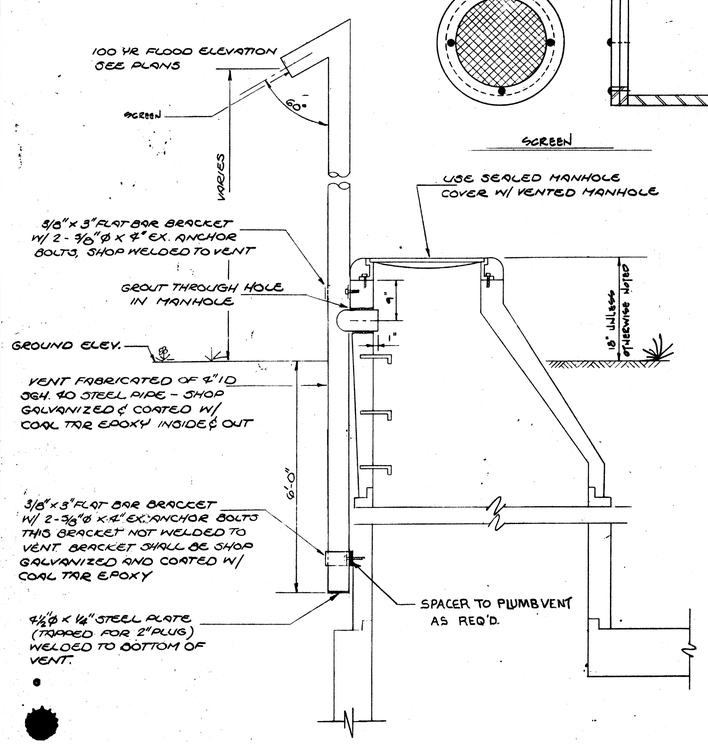

MANHOLE VENT DETAIL

N.T.S.

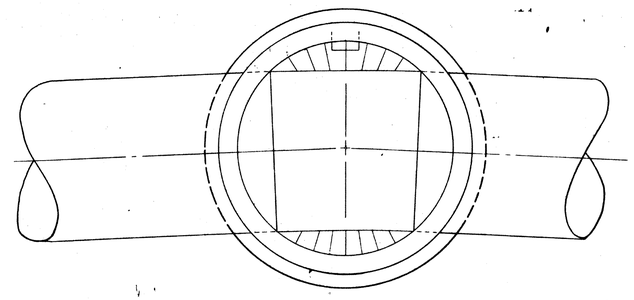

SECTION C-C

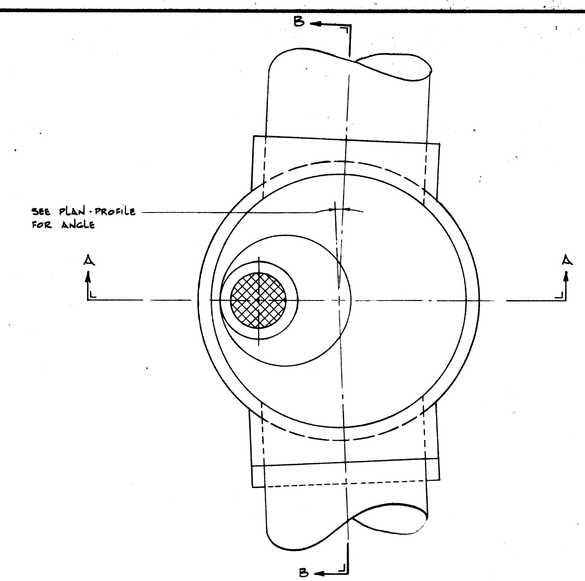

PLAN

NOTES:

1) ALL MANHOLE RINGS SHALL BE ANCHORED TO THE ECCENTRIC SECTION WITH (2) ½" ANCHOR BOLTS

2) MANHOLE RING & COVERS FOR SEALED SHALL BE DEWEY BROS. INC. MCR-2001-W (SOLID COVER), NEENAH OR EQUAL.

3) ALL OTHER MANHOLE RINGS & COVERS SHALL BE DEWEY BROS. INC. # 2001-W (WITH 8 HOLES IN COVER), NEENAH OR EQUAL.

NOTE:

GRADE RINGS SHALL BE USED ONLY WHEN M.H. COVER IS TO BE FLUSH WITH FINISHED GRADE TYP.

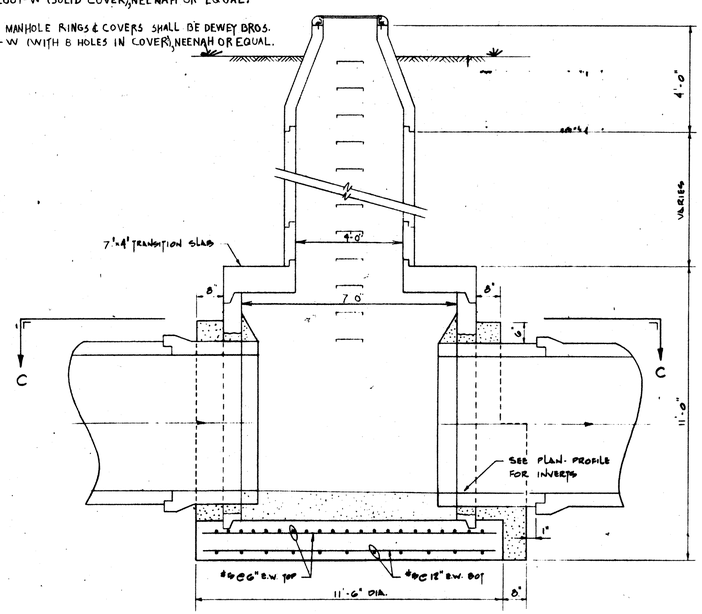

SECTION B-B

NOTE:

CONTRACTOR SHALL PROVIDE CONCRETE COLLARS ON INFLUENT AND EFFLUENT PIPING ON ALL MANHOLES.

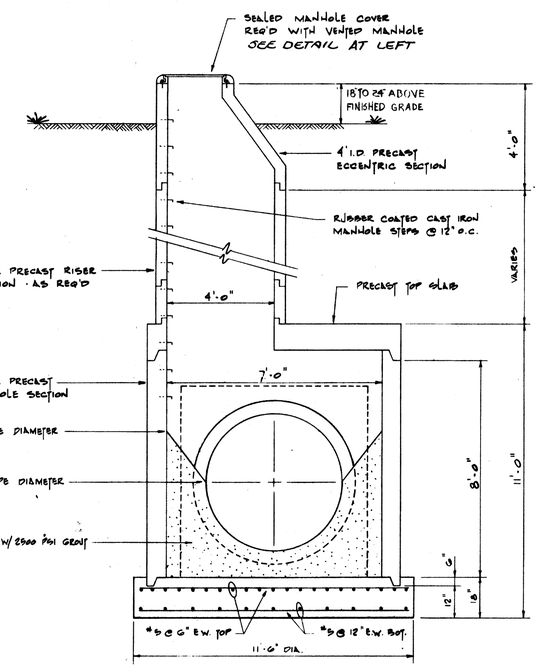

SECTION A-A

NORTH CAROLINA REGISTERED SEAL 14236 PROFESSIONAL ENGINEER 4-18-86 TROY A. DOBYNS

EPA NO. 370382

REVISIONS			
NO.	DATE	NO.	DATE

DESCRIPTION: MANHOLE DETAILS FOR 12" PIPE

DATE: JUNE 1981 SCALES: NONE

DRAWN BY: TRACED BY: CHECKED BY:

CONT. NO. 0018 2019

A-1

PEIRSON & WHITMAN INCORPORATED CONSULTING ENGINEERS RALEIGH, N. C.

SHEET NO. 31 OF 39 SHEETS

CLIENT: BOARD OF LIGHT & WATER COMMISSIONERS CONCORD, NORTH CAROLINA

CAST IRON PIPE & SUPPLY CO. N.Y.N.Y.

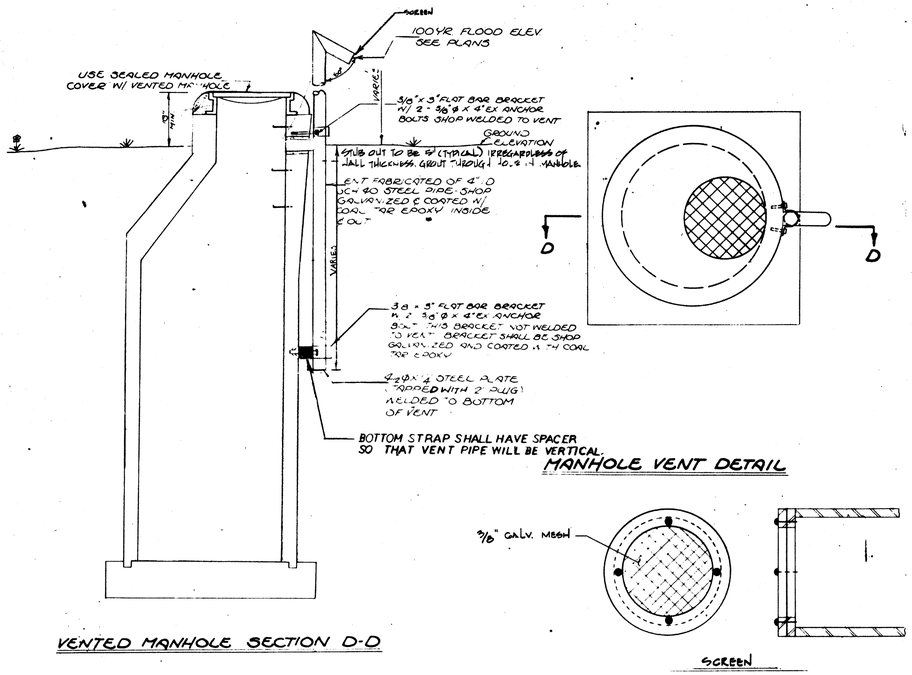

VENTED MANHOLE SECTION D-D

MANHOLE VENT DETAIL

SCREEN

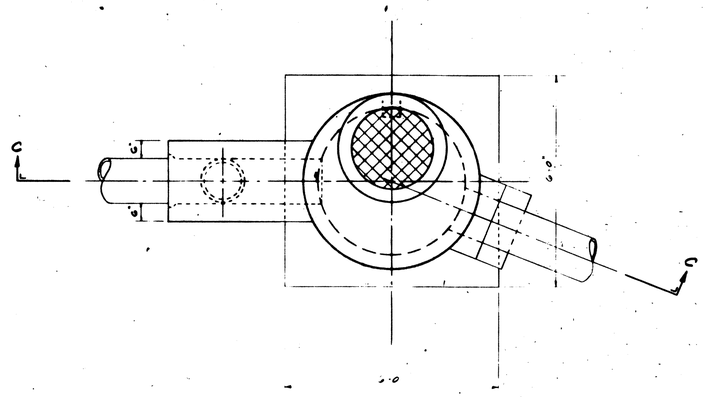

PLAN - DROP MANHOLE

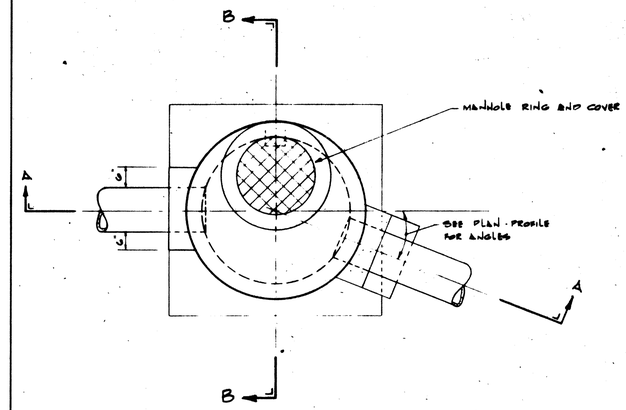

PLAN

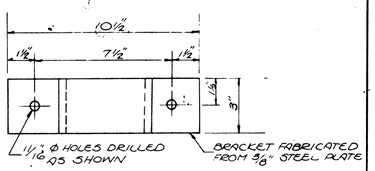

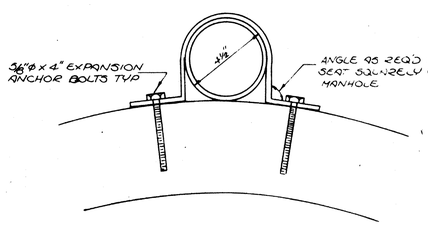

VENT STRAP

NOTE:

GRADE RINGS SHALL BE USED ONLY WHEN M.H. COVER IS TO BE FLUSH WITH FINISHED GRADE. (TYP.)

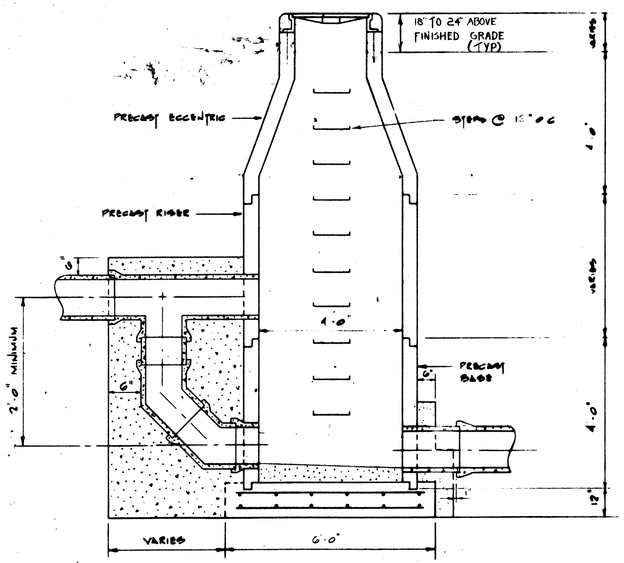

SECTION C-C DROP MANHOLE

MANHOLE RING & COVERS FOR SEALED M.H. SHALL BE DEWEY BROS INC MCR-2001-W (SOLID COVER) NEENAH OR EQUAL.

ALL OTHER MANHOLE RINGS & COVERS SHALL BE DEWEY BROS INC 2001 W (WITH 8 HOLES IN COVER) NEENAH OR EQUAL.

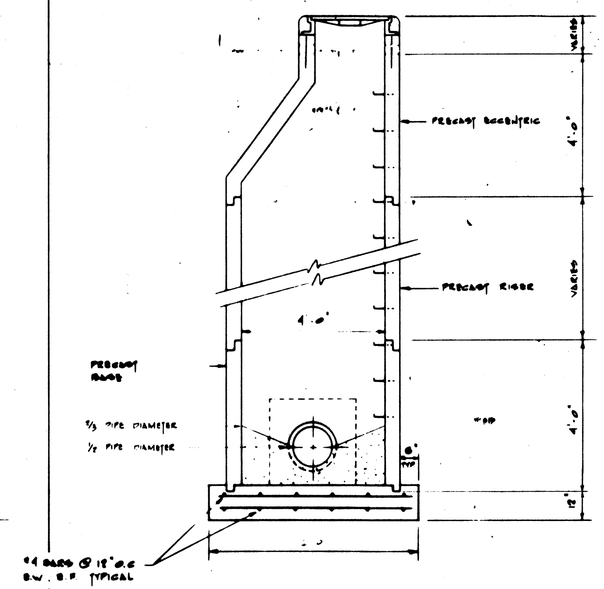

SECTION B-B

NOTE:

ALL MANHOLE RINGS SHALL BE ANCHORED TO THE ECCENTRIC SECTION WITH (2) - 1/2" Ø ANCHOR BOLTS.

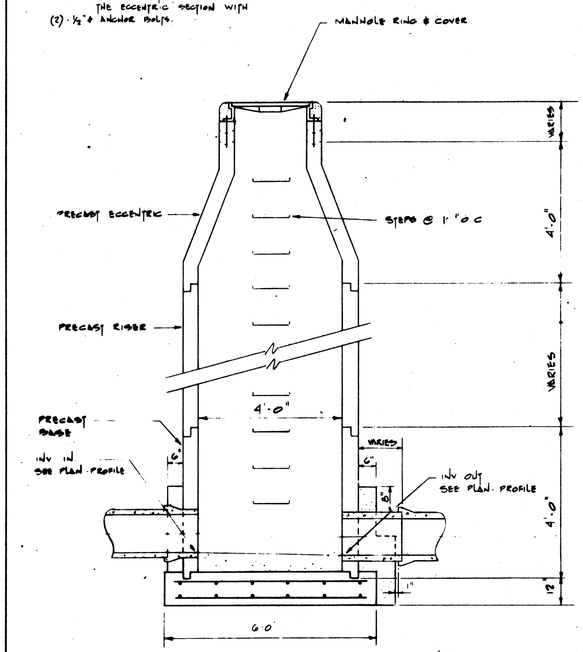

SECTION A-A

NOTE:

CONTR. SHALL PROVIDE CONCRETE GROUT COLLARS ON INFLUENT AND EFFLUENT PIPING ON ALL MANHOLES.

EPA NO. 370382

NORTH CAROLINA PROFESSIONAL SEAL ENGINEER TROY A. DOZIER 9/18/81

REVISIONS			
NO.	DATE	NO.	DATE

DESCRIPTION: MANHOLE DETAILS

5' Ø MANHOLE FOR 15" & 16" & PIPE

DATE: JUNE 1981 SCALES: NONE

DRAWN BY: TRACED BY: CHECKED BY:

CONT. NO. 2018 / 2019 B1

PEIRSON & WHITMAN INCORPORATED CONSULTING ENGINEERS RALEIGH, N. C.

SHEET NO. 32 OF 39 SHEETS

CLIENT: BOARD OF LIGHT & WATER COMMISSIONERS CONCORD, NORTH CAROLINA

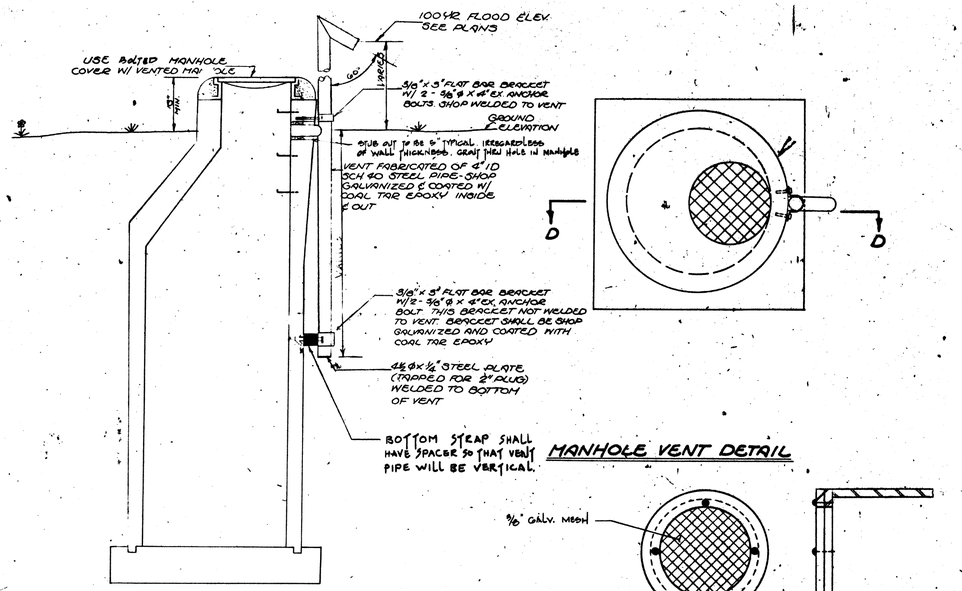

VENTED MANHOLE SECTION D-D

MANHOLE VENT DETAIL

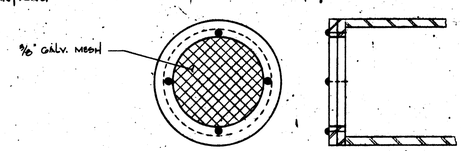

SCREEN

NOTE - MANHOLE RING & COVERS FOR SEALED MANHOLE SHALL BE DEWEY BROS., INC. MCR-2001-W (SOLID COVER) NEENAH OR EQUAL.
ALL OTHER MANHOLE RINGS & COVERS SHALL BE DEWEY BROS, INC. # 2001 W (WITH 8 HOLES IN COVER) NEENAH OR EQUAL.

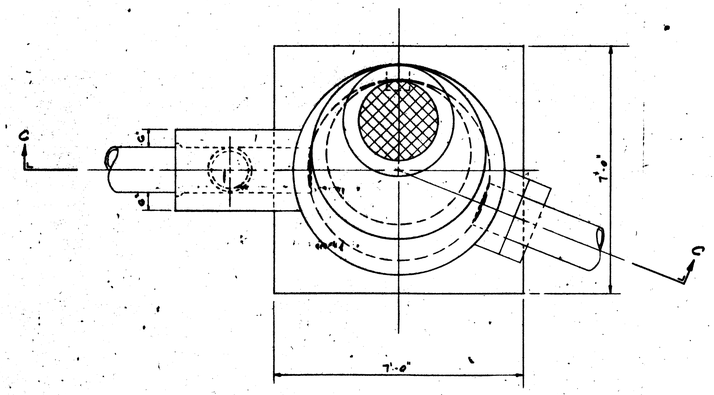

PLAN - DROP MANHOLE

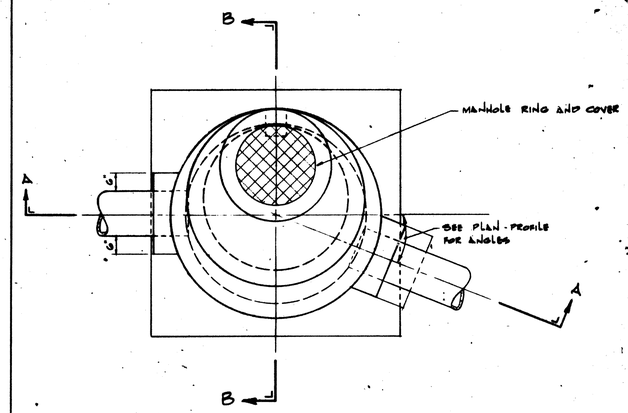

PLAN

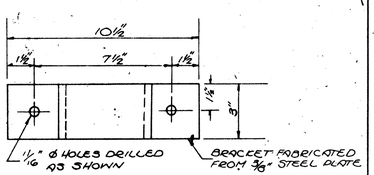

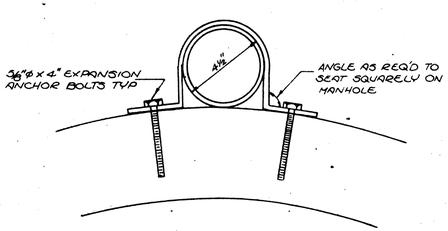

VENT STRAP

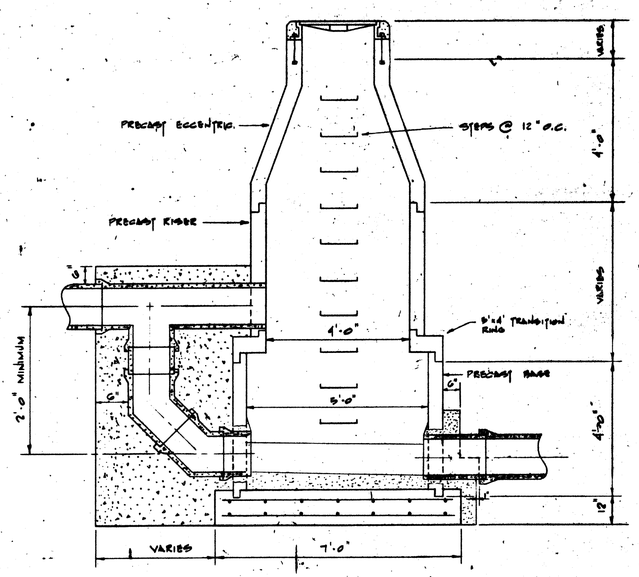

SECTION C-C DROP MANHOLE

NOTE:
GRADE RINGS SHALL BE USED ONLY WHEN MH COVER IS TO BE FLUSH WITH FINISHED GRADE. (TYP.)

18" TO 24" ABOVE FINISHED GRADE (TYP.)

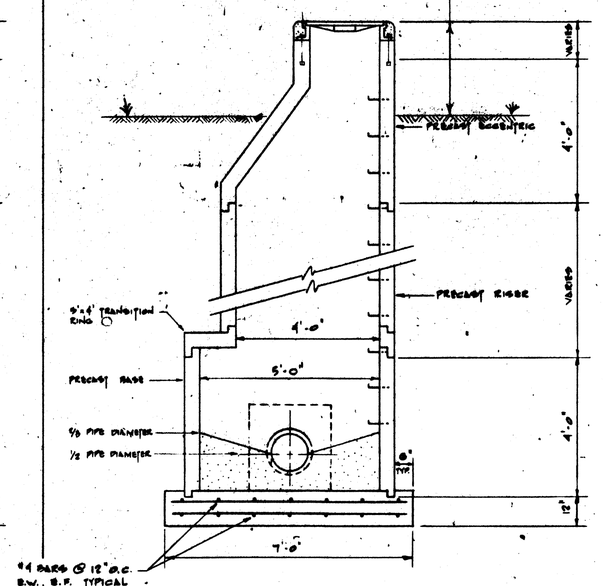

SECTION B-B

NOTE:
ALL MANHOLE RINGS SHALL BE ANCHORED TO THE ECCENTRIC SECTION WITH (4) ½" ANCHOR BOLTS.

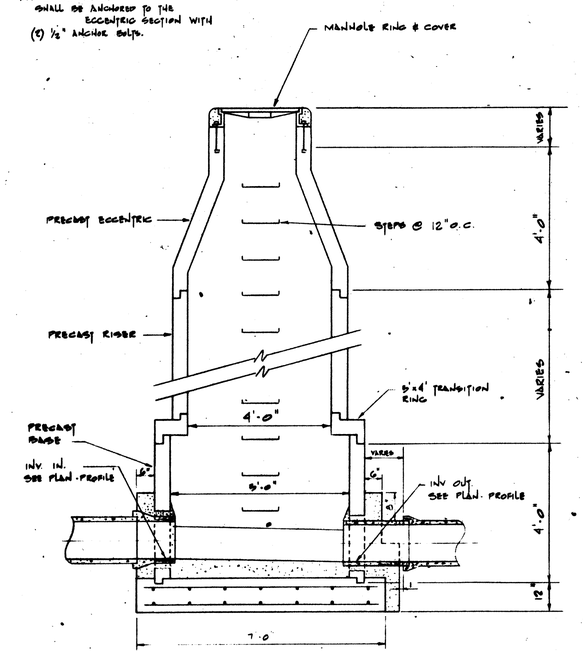

SECTION A-A

NOTE
CONTR. SHALL PROVIDE CONCRETE GRAUT COLLARS ON INFLOWING AND EFFLUENT PIPING ON ALL MANHOLES.

NORTH CAROLINA PROFESSIONAL SEAL ENGINEER TROY A. DOBBS

REVISIONS			
NO.	DATE	NO.	DATE

DESCRIPTION: Manhole Details
5' ϕ Manhole FOR 10" & 12" PIPE
DATE: JUNE 1981 SCALES: None
DRAWN BY: TRACED BY: CHECKED BY:

CONT. NO. 0018 0019
B1

PEIRSON & WHITMAN
INCORPORATED
CONSULTING ENGINEERS
RALEIGH, N. C.

SHEET NO. 33 OF 37 SHEETS

CLIENT: BOARD OF LIGHT & WATER COMMISSIONERS
CONCORD, NORTH CAROLINA

CASE BLUEPRINT & SUPPLY CO. 362791

NOTES:

1. FLOW METER SHALL BE 6" F&P MAGNETIC FLOW METER MODEL 10D1439 OR EQUAVALENT METER SHALL BE PROVIDED WITH ULTRASONIC CLEANING, POLYURETHANE LINING, 316 SS. ELECTRODES, F&P SIGNAL CONVERTER TYPE 50 PZ 127 SJE, F&P TOTALIZER - RECORDER MODEL 51-1102 DB BXX (MOUNTED IN PUMP STATION), SHEILDED CABLE (AS REQUIRED)

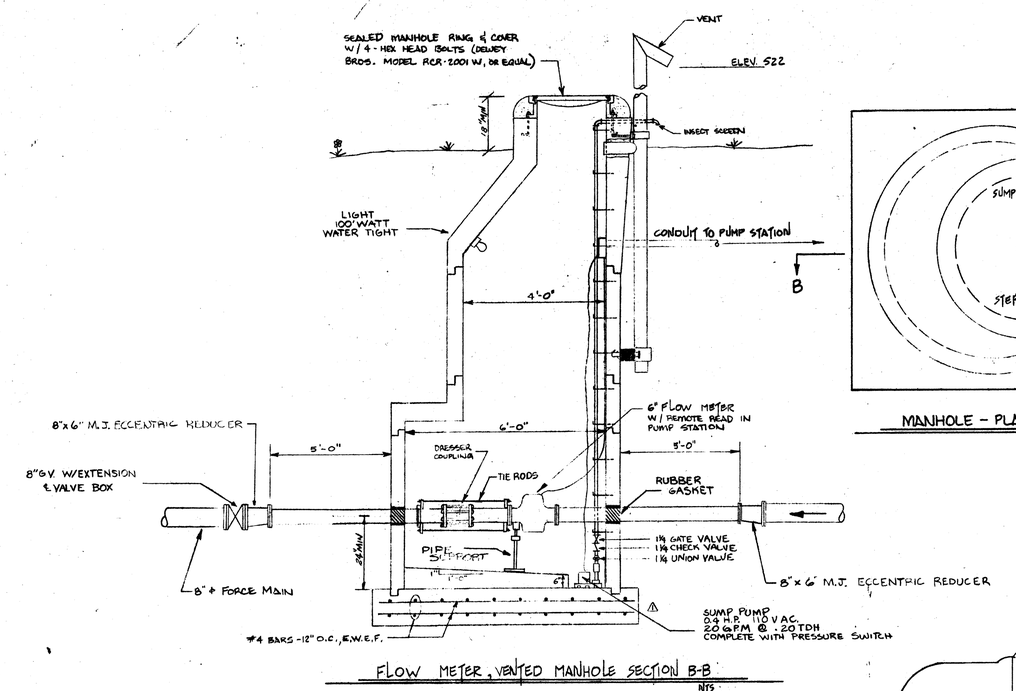

FLOW METER, VENTED MANHOLE SECTION B-B

NTS

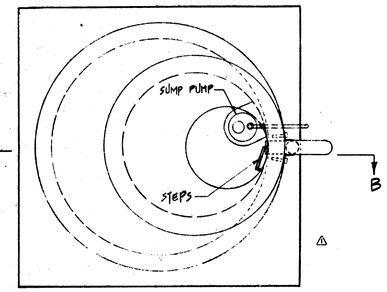

MANHOLE - PLAN VIEW

NTS

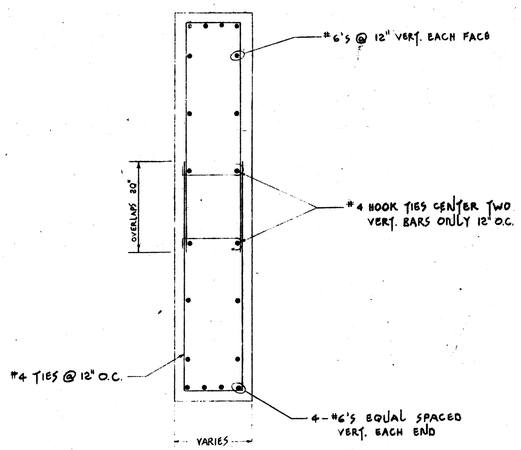

SECTION A-A

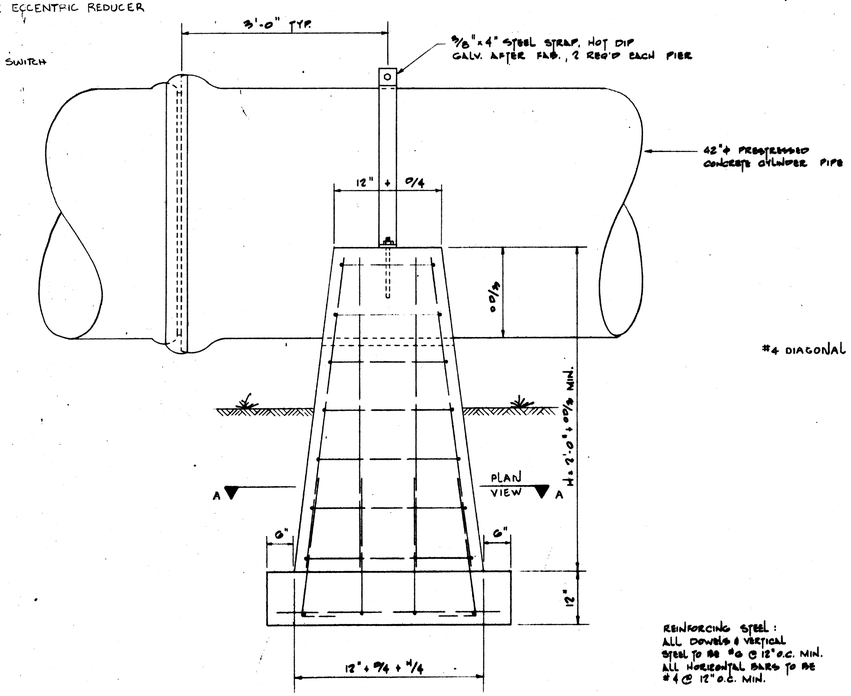

FRONT ELEVATION

REINFORCING STEEL:
ALL DOWELS & VERTICAL STEEL TO BE #6 @ 12" O.C. MIN.
ALL HORIZONTAL BARS TO BE #4 @ 12" O.C. MIN.

H - HEIGHT OF PIER
D - NOMINAL DIA. OF PIPE
OD - OUTSIDE DIA. OF PIPE

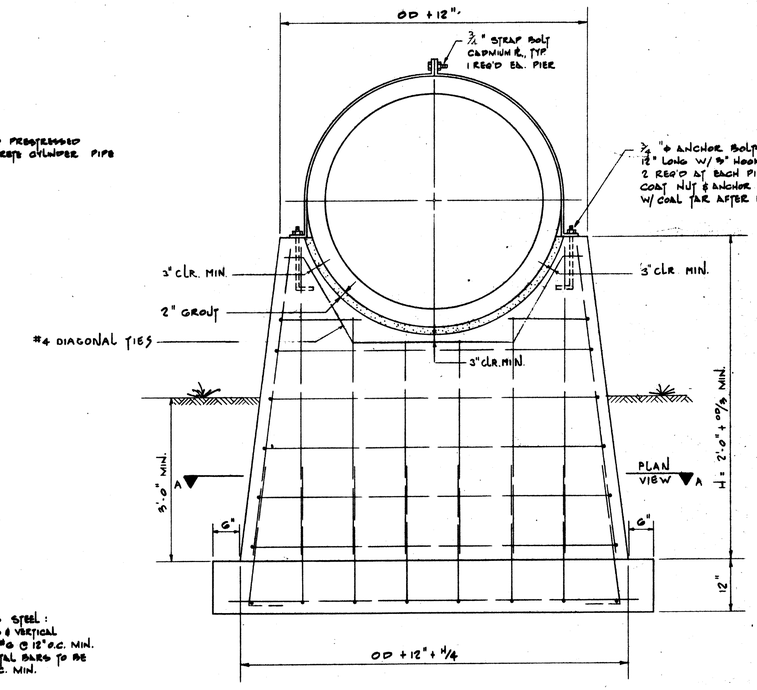

SIDE ELEVATION

REV. NO. △ - FLOW METER VENTED MANHOLE DETAILS ADDED TO THIS SHEET

EPA No. 370382

REVISIONS			
NO.	DATE	NO.	DATE
△	8/25/82		

DESCRIPTION: PIER DETAILS FOR 42" ϕ PIPE
FLOW METER VENTED MANHOLE DETAILS

DATE: JUNE 1981 SCALES: NONE

DRAWN BY: TRACED BY: CHECKED BY:

NORTH CAROLINA REGISTERED SEAL ENGINEER TROY A. DOBY 1/8/81

CONT. NO. 20019

A-1

PEIRSON & WHITMAN
INCORPORATED
CONSULTING ENGINEERS
RALEIGH, N. C.

SHEET NO. 34 OF 37 SHEETS

CLIENT: BOARD OF LIGHT & WATER COMM.
CONCORD, N.C.

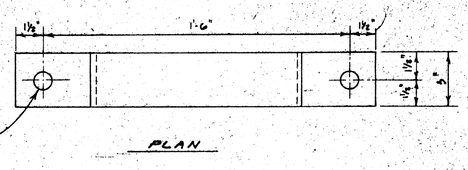

PLAN

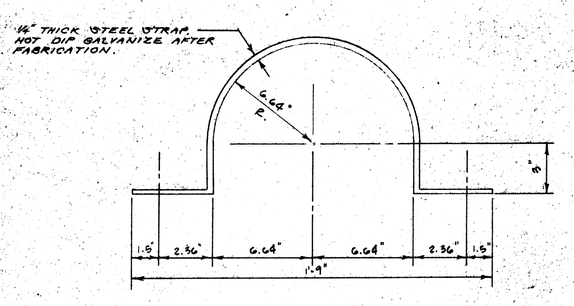

ELEVATION
N.T.S.

STRAP DETAILS

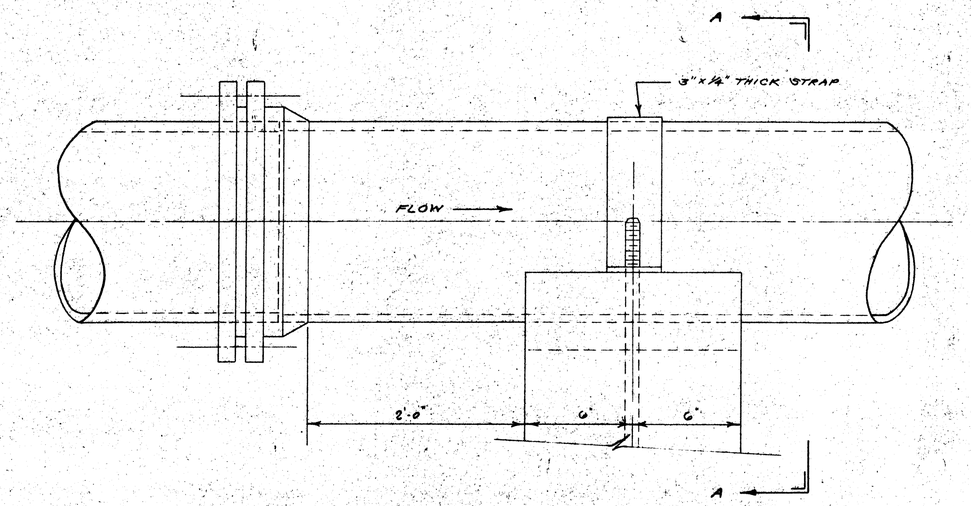

ELEVATION B-B
N.T.S.

PIER DETAILS

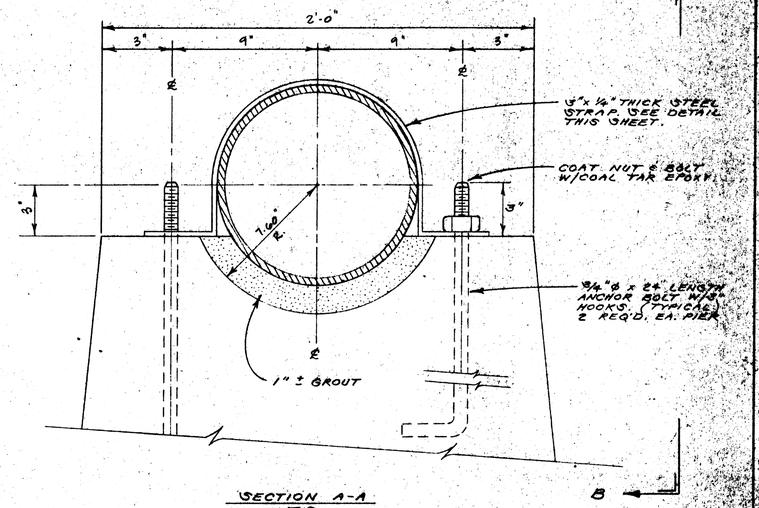

SECTION A-A
N.T.S.

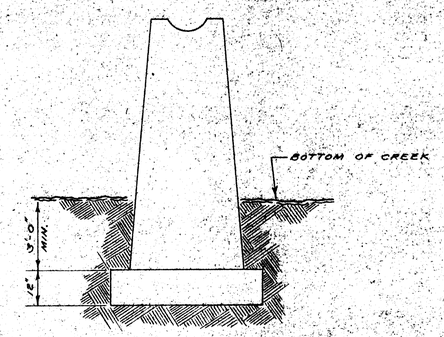

LOCATION DETAIL
N.T.S.

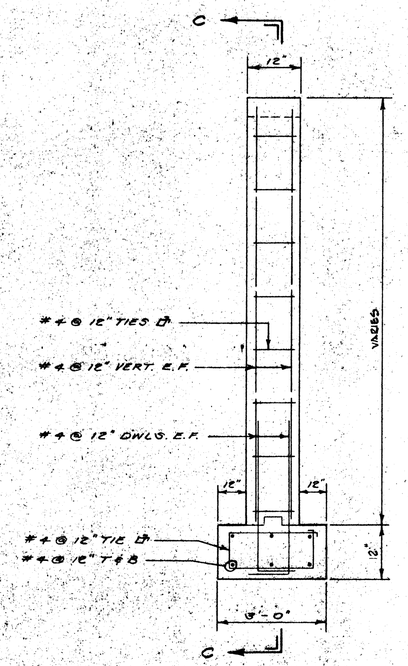

SECTION D-D

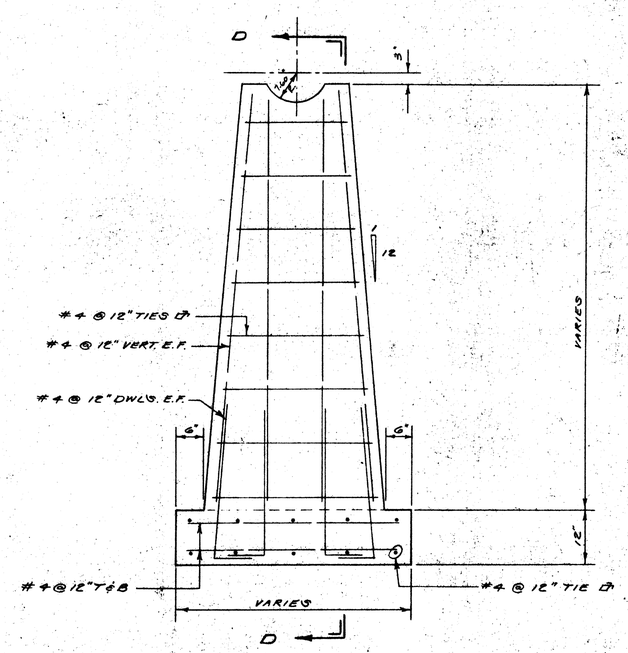

SECTION C-C

REINFORCING STEEL DETAILS
N.T.S.

EPA No. 370382

NORTH CAROLINA PROFESSIONAL SEAL ENGINEER ROY A. DOBY

REVISIONS			
NO.	DATE	NO.	DATE

DESCRIPTION: PIER DETAILS FOR 12"ø PIPE

DATE: JUNE 1981 SCALES: N.T.S.

DRAWN BY: TRACED BY: CHECKED BY:

CONT. NO. 2016/2019 B-1

PEIRSON & WHITMAN INCORPORATED CONSULTING ENGINEERS RALEIGH, N.C.

CLIENT: BOARD OF LIGHT & WATER COMMISSIONERS CONCORD, NORTH CAROLINA

SHEET NO. 36 OF 39 SHEETS

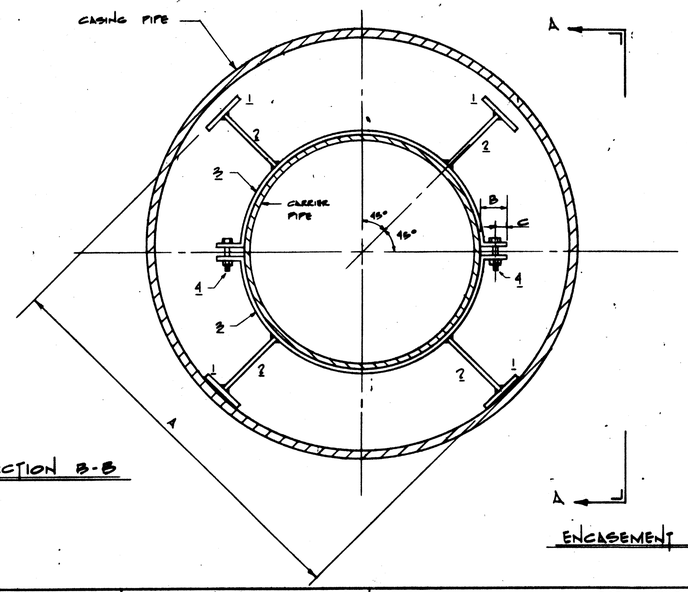

SECTION B-B

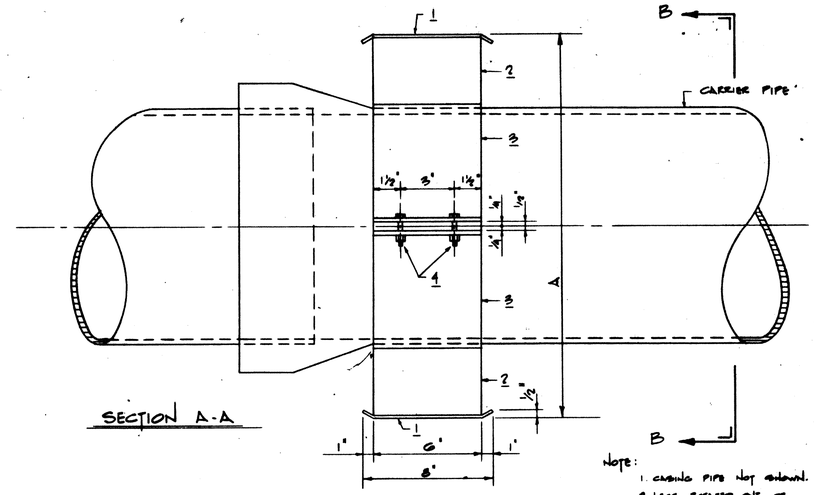

SECTION A-A

ENCASEMENT DETAILS

NOTE:
1. CASING PIPE NOT SHOWN.
2. LEGS ROTATED OUT OF POSITION FOR CLARITY.

CARRIER PIPE		CASING PIPE				PIPE SUPPORT ASSEMBLY MARK NUMBER				DIMENSIONS		
		RAILROAD		HIGHWAY								
NOMINAL DIA.	O.D.	O.D.	WALL	O.D.	WALL	1	2	3	4	A	B	C
16"	17.40"	30.00"	0.469"	30.00"	0.312"	8" x 3" x 3/8"	6" x 4 1/4" x 3/8"	6" x 3/8"	1/2" ϕ	27.40"	3"	1 3/8"
10"	11.10"	18.00"	0.312"	18.00"	0.250"	8" x 2" x 1/4"	6" x 2" x 1/4"	6" x 1/4"	3/8" ϕ	16.10"	1 3/4"	3/4"
8"	9.05"	16.00"	0.281"	16.00"	0.250"	8" x 2" x 1/4"	6" x 2" x 1/4"	6" x 1/4"	3/8" ϕ	14.05"	1 3/4"	3/4"
12"	13.20"	20.00"	0.344"	20.00"	0.250"	8" x 2" x 1/4"	6" x 1 3/4" x 1/4"	6" x 1/4"	3/8" ϕ	17.70"	1 3/4"	3/4"

NOTES:
1. CARRIER PIPE IS D.I.P. PUSH ON JOINT. USE ONE SUPPORT ASS'Y PER JOINT AND PARTIAL JOINT.
2. CASING PIPE MATERIAL IS STEEL.
3. HOT DIP GALVANIZE ALL STEEL ASSEMBLY PARTS AFTER FABRICATION.
4. CADMIUM ⊕ ALL NUTS & BOLTS.

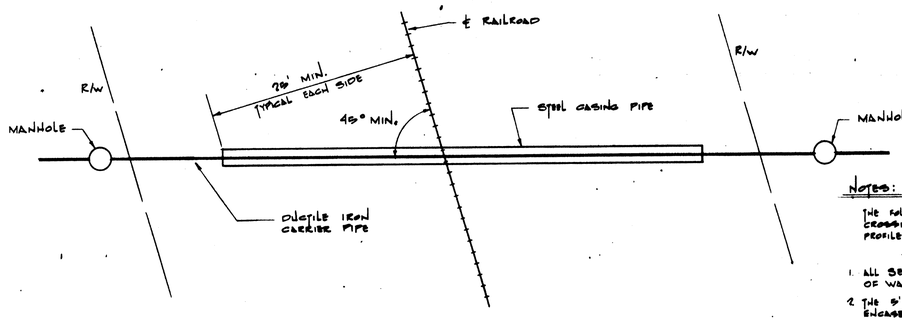

PLAN

NOTES:

THE FOLLOWING NOTES APPLY TO ALL RAILROAD CROSSINGS UNLESS MODIFIED ON THE PLAN-PROFILE SHEETS.

1. ALL SEWER PIPE INSIDE RAILROAD RIGHT OF WAY SHALL BE DUCTILE IRON.
2. THE 5'-6" DIMENSION IS FROM TOP OF ENCASEMENT TO BOTTOM OF RAIL.
3. BOTH ENDS OF THE CASING PIPE SHALL BE BRICKED UP WITH A 2" DRAIN HOLE IN THE LOW END.
4. CASING PIPE SHALL BE STEEL WITH A MIN. YIELD STRENGTH OF 35,000 PSI.
5. INSTALLATION OF CASING PIPE SHALL BE BY DRY BORING & JACKING.
6. INSTALLATION OF CASING AND CARRIER PIPE SHALL CONFORM TO AREA SPECS. - PART 6- "PIPELINES".
7. CONTACT RAILROAD REPRESENTATIVE BEFORE BEGINNING WORK.
8. CUT A LENGTH OF PIPE SUCH THAT A JOINT EXISTS AT BOTH ENDS OF THE ENCASEMENT.
9. GREASE ENCASEMENT AS REQUIRED FOR EASE OF INSTALLATION.

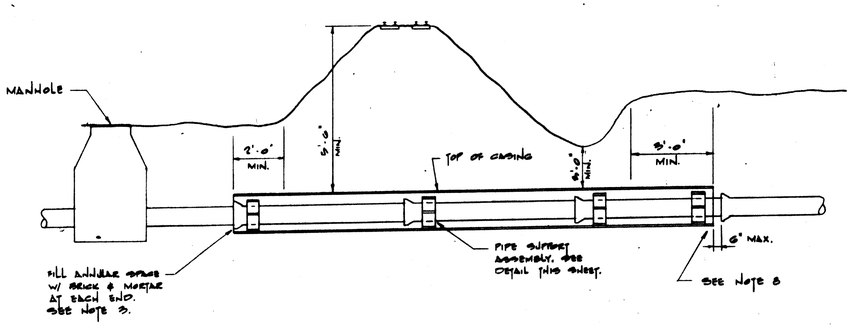

RAILROAD CROSSING DETAIL

NTS

NOTES:

THE FOLLOWING NOTES APPLY TO HIGHWAY CROSSINGS AS SHOWN ON THE PLAN-PROFILE SHEETS.

1. ALL SEWER PIPE FROM MANHOLE TO MANHOLE AT HIGHWAY CROSSINGS SHALL BE DUCTILE IRON.
2. CASING PIPE SHALL BE STEEL WITH A MIN YIELD STRENGTH OF 35,000 P.S.I.
3. INSTALLATION OF CASING PIPE SHALL BE BY DRY BORING & JACKING.
4. INSTALLATION OF CASING AND CARRIER PIPE SHALL CONFORM TO DEPT. OF TRANSPORTATION MANUAL " POLICIES AND PROCEDURES FOR ACCOMODATING UTILITIES ON HIGHWAY RIGHTS OF WAY".
5. CUT A LENGTH OF PIPE SUCH THAT A JOINT EXISTS AT BOTH ENDS OF THE ENCASEMENT.
6. GREASE ENCASEMENT AS REQUIRED FOR EASE OF INSTALLATION.

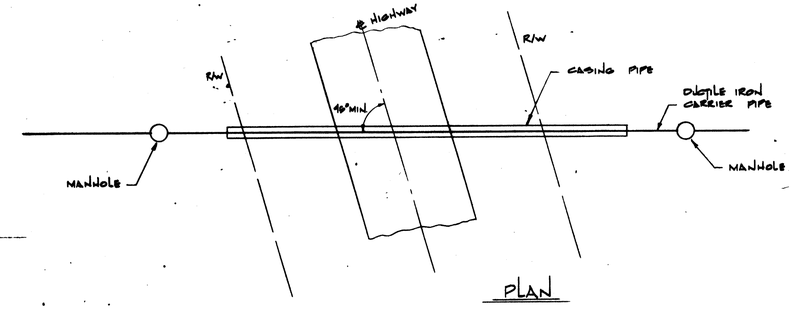

PLAN

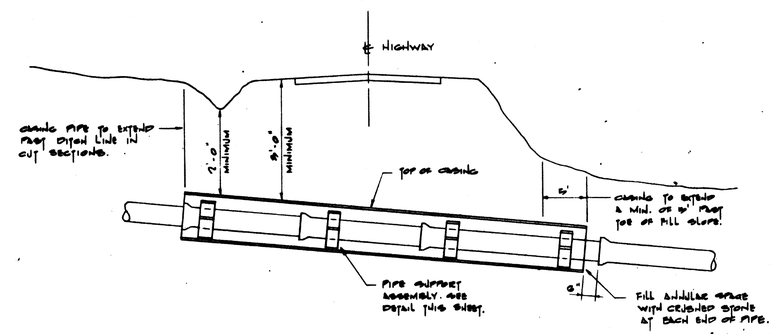

HIGHWAY CROSSING DETAIL

NTS

EPA NO 370388

NORTH CAROLINA REGISTERED SEAL 9-18-81 ENGINEER ROY A. DORTY

REVISIONS			
NO.	DATE	NO.	DATE

DESCRIPTION: HIGHWAY AND RAILROAD CROSSING ENCASEMENT DETAILS FOR SEWER LINES

DATE: JUNE 1981 SCALES: NONE

DRAWN BY: TRACED BY: CHECKED BY:

CONT. NO. 3018 0014 B-1

PEIRSON & WHITMAN INCORPORATED CONSULTING ENGINEERS RALEIGH, N. C.

SHEET NO. 36 OF 39 SHEETS

CLIENT: BOARD OF LIGHT & WATER COMMISSIONERS CONCORD, NORTH CAROLINA

CLASS REPRODUCTIONS SUPPLY CO.

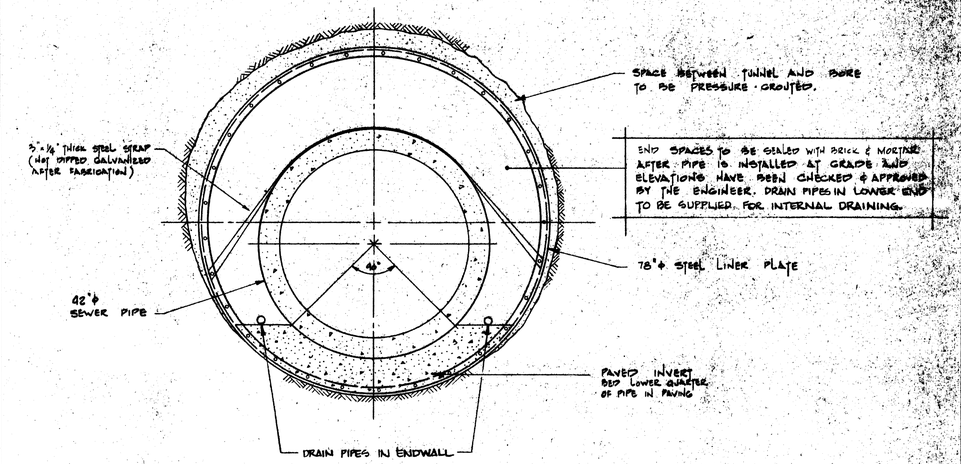

TUNNEL LINER DETAIL

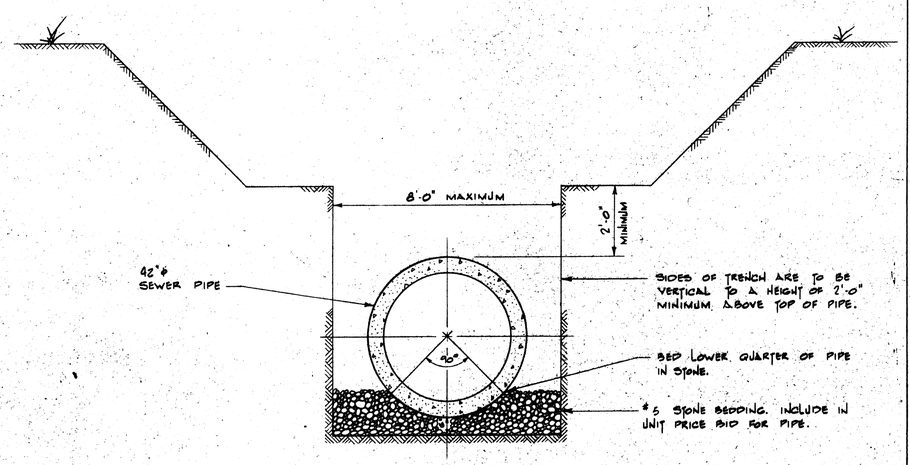

TRENCH & BEDDING DETAIL

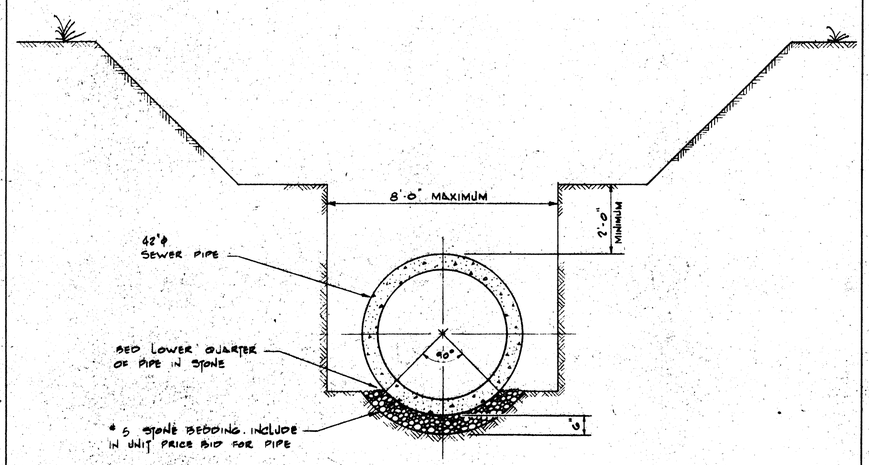

THIS DETAIL MAY BE USED IN STABLE SOIL CONDITIONS AT THE OPTION OF THE CONTRACTOR.

ALTERNATE TRENCH DETAIL

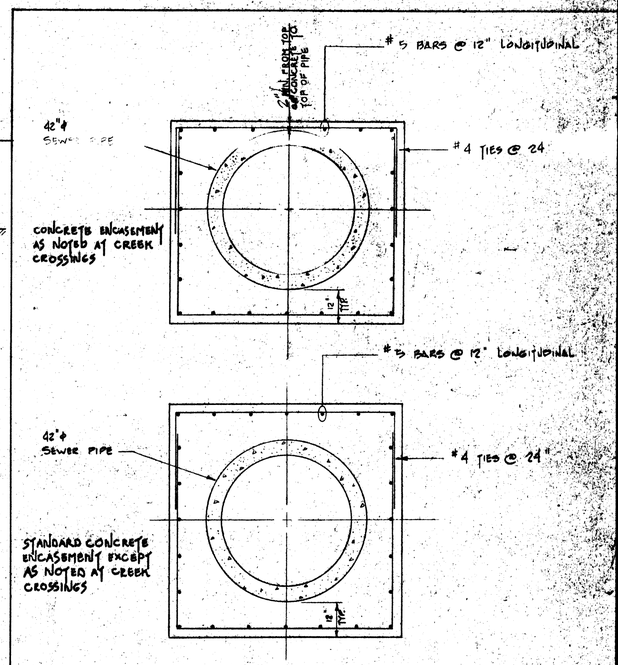

CONCRETE ENCASEMENT DETAIL

NORTH CAROLINA REGISTERED SEAL 1956 10-18-84 PROFESSIONAL ENGINEER TROY A. DOBY

REVISIONS			
NO.	DATE	NO.	DATE

DESCRIPTION: COLDWATER CREEK OUTFALL
DETAILS

DATE: JUNE 1981 SCALES: None

DRAWN BY: ____ TRACED BY: ____ CHECKED BY: ____

CONT. NO. 0018 0019 A-1

PEIRSON & WHITMAN INCORPORATED CONSULTING ENGINEERS RALEIGH, N. C.

SHEET NO. 2 OF 24 SHEETS

EAD NO. 370382

CLIENT: BOARD OF LIGHT & WATER COMM'RS CONCORD, N.C.

ASF-BLUTHENTHAL & JUFFLY CO. N3-781

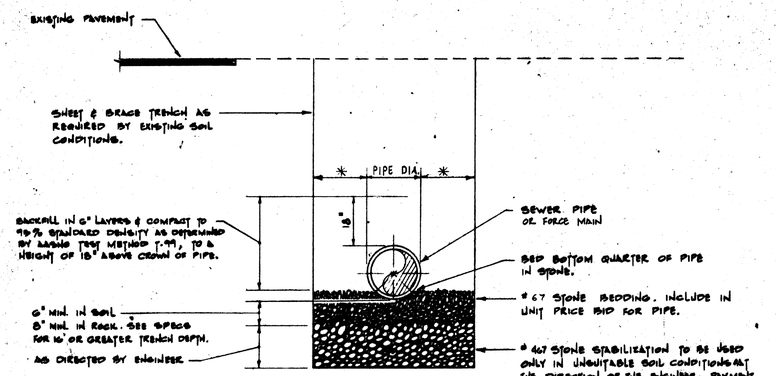

PIPE DIA.	✳
LESS THAN 14"	12"
14" TO 36"	18"
MORE THAN 36"	24"

NOTES:

1. SHAPE BELL HOLE IN BEDDING MATERIAL.
2. WHERE ROCK OR NON-CUSHIONING MATERIAL IS ENCOUNTERED IN TRENCH BOTTOM, PLACE A CUSHION OF 6" MIN. BEDDING MATERIAL BETWEEN THE ROCK & THE BOTTOM OF THE PIPE.
3. WHERE UNSTABLE SOIL IS ENCOUNTERED, EXCAVATE THE SOIL AS DIRECTED BY THE ENGINEER AND BACKFILL WITH No. 467 STONE TO BRING TRENCH BOTTOM UP TO GRADE.
4. BACKFILL REQUIREMENTS FOR PIPE CROSSING STREETS & HIGHWAYS TAKES PRECEDENCE OVER THIS DETAIL. SEE STREET REPAIR DETAIL.
5. AT THE OPTION OF THE CONTRACTOR AND IN SUITABLE SOIL, THE TRENCH BOTTOM MAY BE SHAPED TO CONFORM TO THE LOWER QUARTER OF THE PIPE IN LIEU OF BEDDING MATERIAL. SHAPE HOLE FOR PIPE BELL. SEE ALTERNATE BEDDING DETAIL BELOW.

TRENCH, BEDDING, & BACKFILL DETAIL

N.T.S.

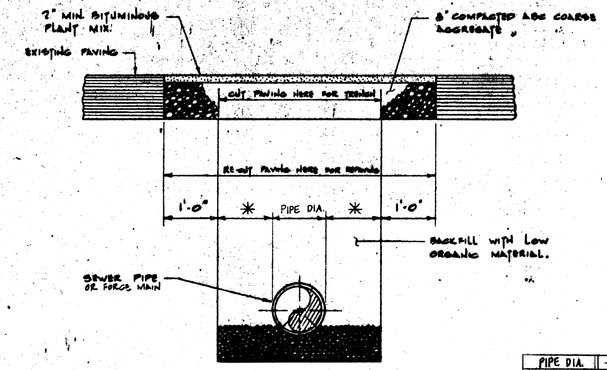

PIPE DIA.	✳
LESS THAN 14"	12"
14" TO 36"	18"
MORE THAN 36"	24"

NOTES

1. NEW PAVEMENT SHALL HAVE 8" COMPACTED ABC COARSE AGGREGATE AND 2" TOPPING OR MATCH EXISTING CONSTRUCTION, WHICHEVER IS GREATER.
2. TRENCH IS TO BE BACKFILLED IN 6" LAYERS AND COMPACTED TO 95% STANDARD DENSITY AS DETERMINED BY AASHO TEST METHOD T-99 BEFORE PAVEMENT REPAIRS ARE MADE.
3. COMPACTION TEST REQUIRED AT REQUEST OF INSPECTOR.
4. ALL PAVED STREETS & SECONDARY ROADS WHICH ARE OPEN CUT TO INSTALL SEWER PIPE MUST BE REPAIRED ACCORDING TO THIS DETAIL.

STREET REPAIR DETAIL

N.T.S.

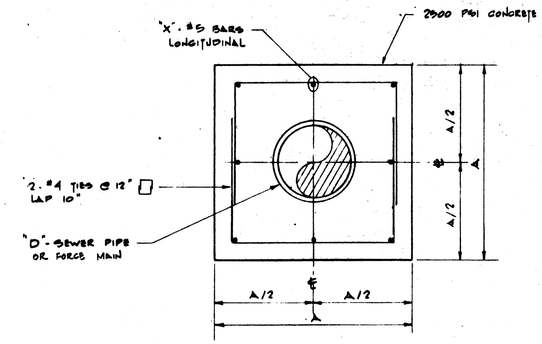

NOMINAL DIAMETER "D"	CONCRETE ENCASEMENT "A"	LONGITUDINAL STEEL "X"
8"	2'-8"	8
16"	3'-8"	12

ENCASEMENT DETAIL

N.T.S.

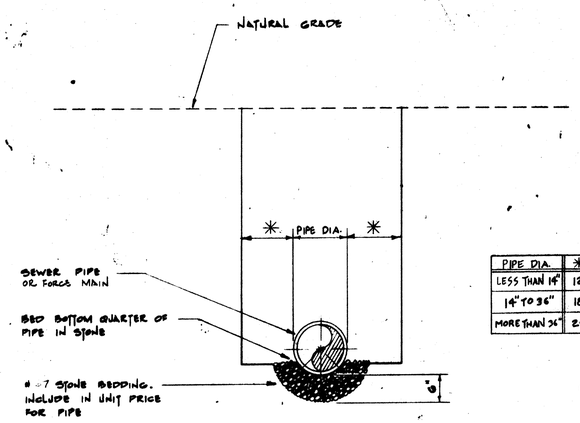

PIPE DIA.	✳
LESS THAN 14"	12"
14" TO 36"	18"
MORE THAN 36"	24"

THIS DETAIL MAY BE USED IN STABLE SOIL CONDITIONS AT THE OPTION OF THE CONTRACTOR.

ALTERNATE BEDDING DETAIL

N.T.S.

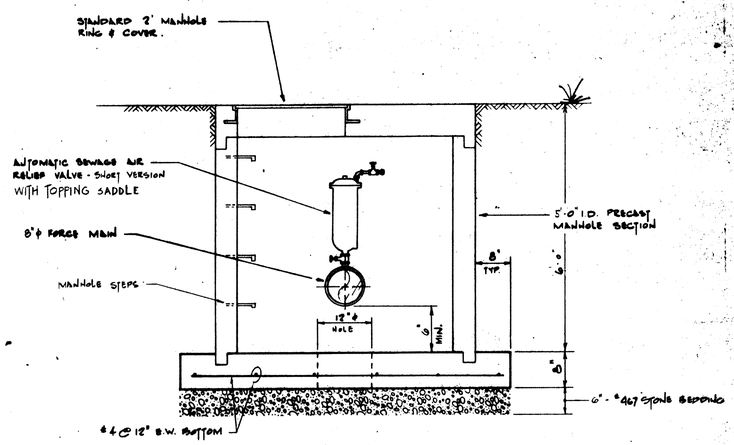

AIR RELIEF VALVE VAULT

N.T.S.

EPA No. 370392

REVISIONS			
NO.	DATE	NO.	DATE

DESCRIPTION: Details

DATE: JUNE 1981 SCALES: NTS

DRAWN BY: GS TRACED BY: CHECKED BY:

COST & NO. 0018/0019 B-1

PEIRSON & WHITMAN
INCORPORATED
CONSULTING ENGINEERS
RALEIGH, N. C.

SHEET NO. 38 OF 39 SHEETS

CLIENT: BOARD OF LIGHT & WATER COMMISSIONERS
CONCORD, NORTH CAROLINA

NORTH CAROLINA REGISTERED 12-18-81 ENGINEER TROY A. DOBBS

CASE STATIONERY & SUPPLY CO. NASHVILLE

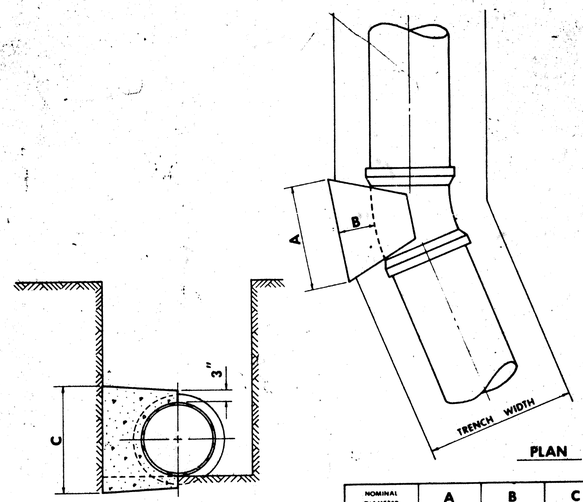

SECTION

PLAN

NOMINAL DIAMETER	A	B	C	TRENCH WIDTH
8"	2'-0"	1'-0"	1'-2"	

22 ½° BENDS

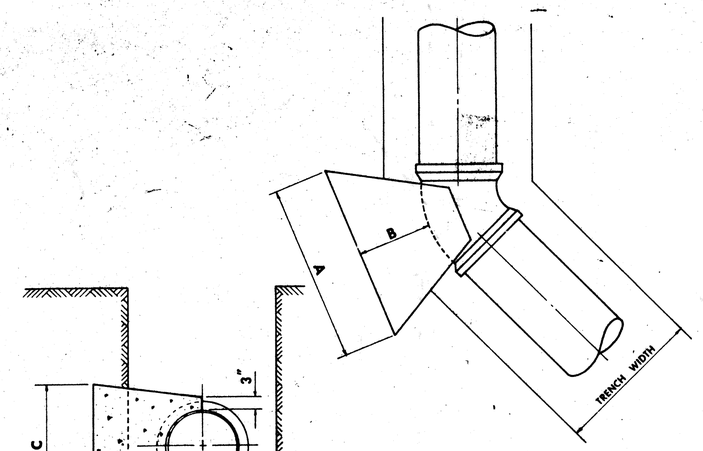

SECTION

PLAN

NOMINAL DIAMETER	A	B	C	TRENCH WIDTH
8"	2'-0"	1'-0"	1'-6"	

45° BENDS

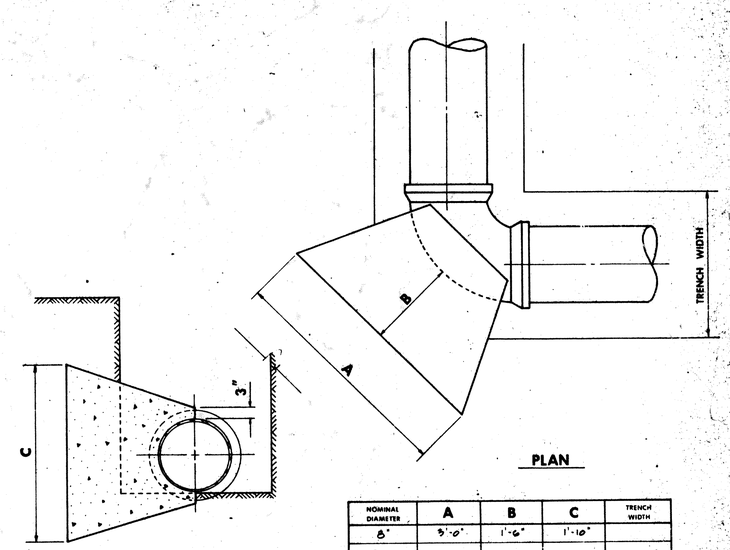

SECTION

PLAN

NOMINAL DIAMETER	A	B	C	TRENCH WIDTH
8"	3'-0"	1'-6"	1'-10"	

90° BENDS

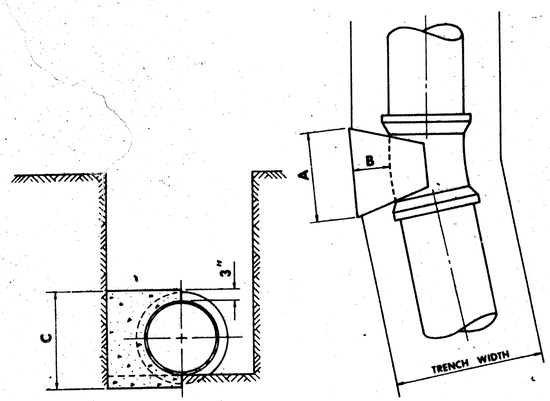

SECTION

PLAN

NOMINAL DIAMETER	A	B	C	TRENCH WIDTH
8"	1'-6"	1'-0"	1'-2"	

11 ¼° BENDS

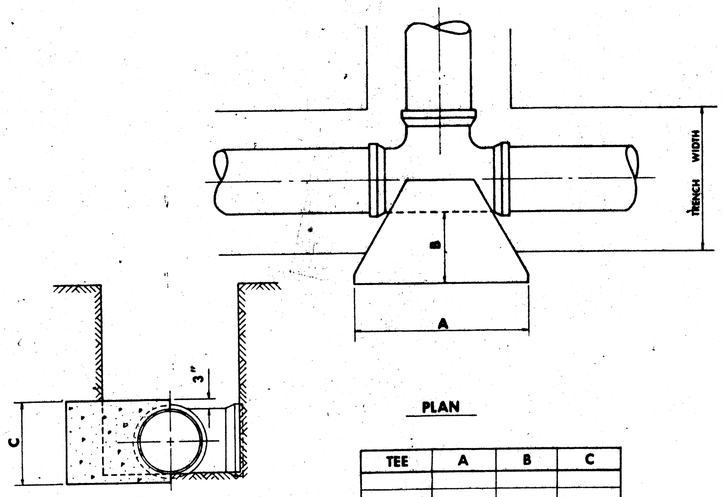

SECTION

PLAN

TEE	A	B	C

TEES

NORTH CAROLINA PROFESSIONAL SEAL 2896 ENGINEER 19 11 81 ROY A. DORY

EPA No. 370382

REVISIONS			
NO.	DATE	NO.	DATE

DESCRIPTION: BLOCKING DETAILS

DATE: JUNE 1981 SCALES: None

DRAWN BY: TRACED BY: CHECKED BY:

CONT. NO. 0018/0019

B-1

PEIRSON & WHITMAN
INCORPORATED
CONSULTING ENGINEERS
RALEIGH, N. C.

SHEET NO. 39 OF 39 SHEETS

CLIENT: BOARD OF LIGHT & WATER COMMISSIONERS
CONCORD, NORTH CAROLINA

(END OF EXHIBIT A)

Exhibit B
Record Drawings for Improvements to Mt. Pleasant Pumping Stations No. 1 and No. 2
(Reference Only)

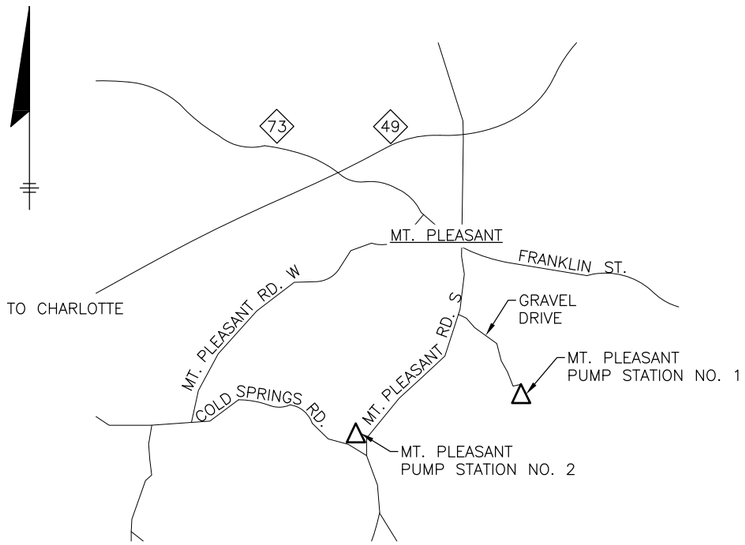

LOCATION MAP

BOARD OF DIRECTORS

CHAIRMAN	TROY BARNHARDT
DIRECTORS	BRIAN HIATT
	DARRELL HINNANT
	MICHAEL LEGG
	JONATHAN MARSHALL
	DAVID PHILLIPS
	ELIZABETH POOLE
	ROBERT RITCHIE
	STEVE SCIASCIA
ACTING EXECUTIVE DIRECTOR	MICHAEL WILSON
DIRECTOR OF ENGINEERING	TIMOTHY KISER, P.E.

RECORD DRAWINGS

WASTEWATER FACILITIES

CONTRACT 8.0
IMPROVEMENTS TO MT. PLEASANT PUMPING STATION NO. 1 AND NO. 2

WATER AND SEWER AUTHORITY OF CABARRUS COUNTY

willis ENGINEERS

DRAWING INDEX

PUMP STATION NO. 1

1 NEW SITE PLAN
2 ENLARGED DEMO SITE PLAN
3 ENLARGED NEW SITE PLAN
4 PLANS AND SECTION
5 ELECTRICAL
6 ELECTRICAL
7 ELECTRICAL

PUMP STATION NO. 2

8 NEW SITE PLAN
9 ENLARGED DEMO SITE PLAN
10 ENLARGED NEW SITE PLAN
11 PLANS
12 SECTION AND DETAIL
13 ELECTRICAL
14 ELECTRICAL
15 ELECTRICAL

GENERAL

16 DETAILS
17 DETAILS

29 JUNE 2018

NORTH CAROLINA PROFESSIONAL SEAL 24494 ENGINEER GREGORY J. WELLS

1968.010

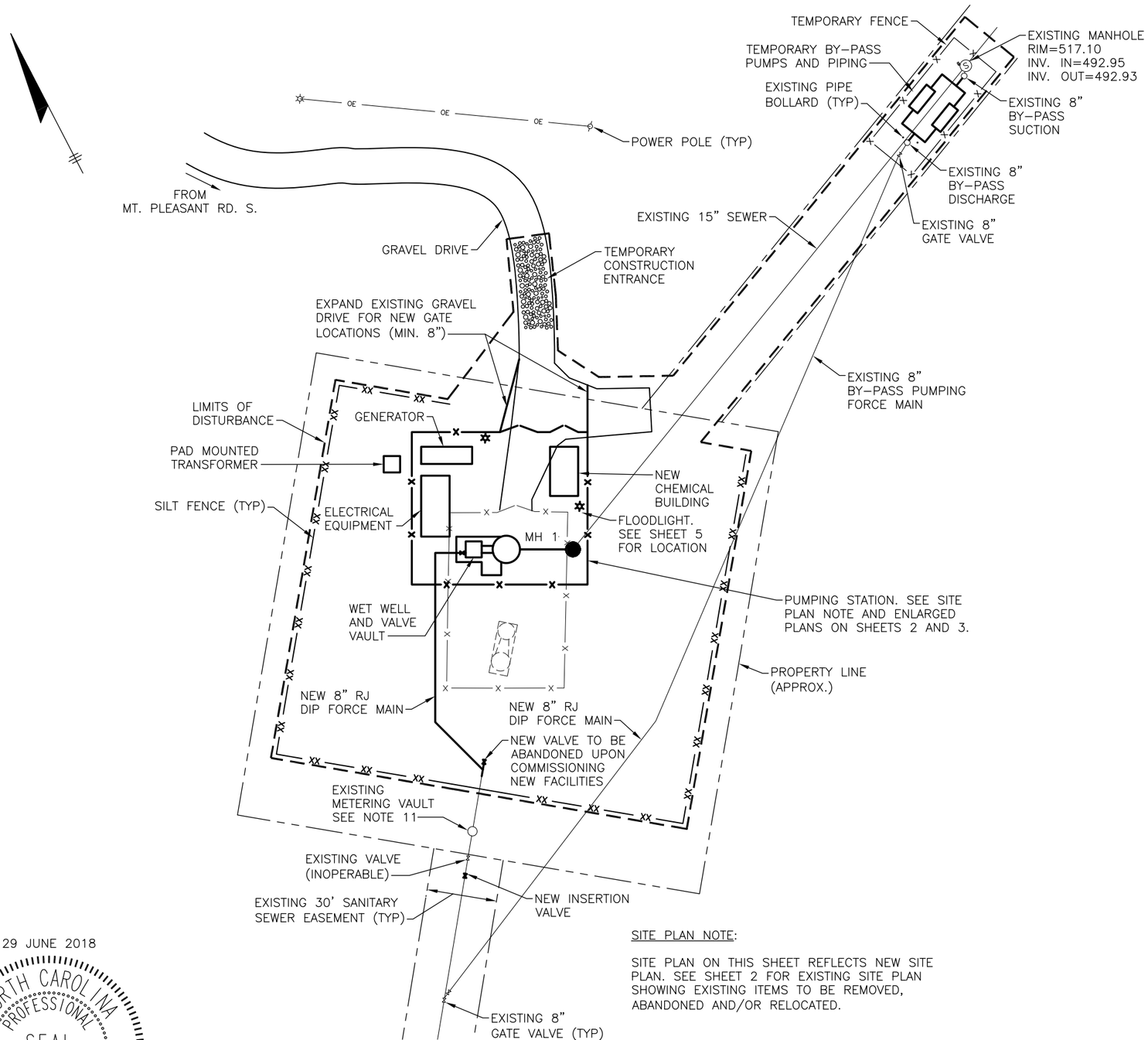

SITE PLAN

SITE PLAN NOTE:

SITE PLAN ON THIS SHEET REFLECTS NEW SITE PLAN. SEE SHEET 2 FOR EXISTING SITE PLAN SHOWING EXISTING ITEMS TO BE REMOVED, ABANDONED AND/OR RELOCATED.

PUMPING STATION NO. 1 GENERAL SEQUENCE OF WORK:

1. COORDINATE AND ASSIST WSACC WITH RELOCATING EXISTING CHEMICAL FEED TANKS AND METERING PUMP TO TEMPORARY LOCATION DURING CONSTRUCTION. SEE GENERAL NOTE 10.
2. CONSTRUCT NEW WET WELL, VALVE VAULT, MANHOLE AND FORCE MAIN TO THE EXTENT POSSIBLE. PRESSURE TEST AS REQUIRED.
3. CONSTRUCT NEW ELECTRICAL WORK AND EXTEND FEEDERS TO POINTS OF CONNECTION TO THE EXTENT POSSIBLE.
4. INSTALL AND TEST NEW GENERATOR TO THE EXTENT POSSIBLE.
5. CONFIRM ALL EQUIPMENT AND MATERIALS FOR REMAINING WORK ARE ON-SITE PRIOR TO INTERRUPTION OF SERVICE.
6. INSTALL BY-PASS PUMPING SYSTEM.
7. UPON APPROVAL OF OWNER AND ENGINEER, PLUG DOWNSTREAM INVERT AT EXISTING MANHOLE AND ESTABLISH BY-PASS PUMPING.
8. UPON CONCURRENCE BY OWNER AND ENGINEER THAT BY-PASS PUMPING SYSTEM IS OPERATING AS INTENDED. COMPLETE CONSTRUCTION OF NEW FACILITIES, MAKE FINAL ELECTRICAL CONNECTIONS, COMPLETE TIE-INS AT SEWER AND FORCE MAIN CONNECTIONS.
9. PROVIDE START-UP AND TESTING OF NEW FACILITIES AND PLACE IN OPERATION.
10. LEAVE BY-PASS PUMPING SYSTEM IN PLACE UNTIL PROPER OPERATION OF NEW FACILITIES ARE CONFIRMED BY OWNER AND ENGINEER (MIN. 3 DAYS).
11. DEMO EXISTING FACILITIES AS SHOWN ON SHEET 2.

PUMPING STATION NO. 1 GENERAL NOTES:

1. ALL WORK SHALL BE COORDINATED WITH THE ENGINEER. CONTRACTOR SHALL SUBMIT A SCHEDULE AND WORK PLAN IN WRITING TO THE ENGINEER AND RECEIVE APPROVAL PRIOR TO BEGINNING WORK.
2. PUMPING STATION AND/OR BY-PASS PUMPING SYSTEM SHALL REMAIN IN SERVICE AT ALL TIMES.
3. THE PUMPING STATION AREA SHALL REMAIN CLOSED AND SECURED TO PREVENT ACCESS DURING NON-WORKING HOURS. CONTRACTOR SHALL PROVIDE TEMPORARY FENCE AND GATES AS REQUIRED FOR CONSTRUCTION AND TO ALLOW ACCESS TO EXISTING PUMPING STATION BY WSACC DURING CONSTRUCTION.
4. LOCATION OF EXISTING FACILITIES ARE APPROXIMATE AND NOT ALL BURIED PIPE AND ELECTRICAL CONDUITS ARE SHOWN. THE CONTRACTOR SHALL VERIFY THE LOCATION OF ALL UTILITIES. CONTRACTOR IS RESPONSIBLE FOR ALL DAMAGE TO EXISTING FACILITIES SCHEDULED TO REMAIN.
5. ALL MATERIAL GENERATED DURING DEMOLITION SHALL BE PROPERLY DISPOSED OF BY THE CONTRACTOR, UNLESS OTHERWISE NOTED.
6. THE CONTRACTOR IS SOLELY RESPONSIBLE FOR SITE SAFETY ASSOCIATED WITH ALL REQUIREMENTS CURRENTLY MANDATED BY THE OCCUPATIONAL SAFETY AND HEALTH ADMINISTRATION.
7. A BENCHMARK AND HORIZONTAL CONTROL WILL BE PROVIDED PRIOR TO CONSTRUCTION.
8. NEW FORCE MAIN SHALL HAVE A MINIMUM OF 3-FEET OF COVER AND SHALL MAINTAIN A NEGATIVE SLOPE FROM THE NEW VALVE VAULT TO THE POINT OF CONNECTION.
9. CONTRACTOR SHALL PROVIDE TEMPORARY FENCING TO RESTRICT ACCESS TO THE BY-PASS PUMPS DURING OPERATION.
10. WSACC WILL MAINTAIN CHEMICAL FEED OPERATION DURING CONSTRUCTION. ACCESS TO EQUIPMENT SHALL BE MAINTAINED AT ALL TIMES.
11. EXISTING FLOW METER SHALL REMAIN. PROVIDE NEW CONDUIT FOR SIGNAL AND POWER CONDUIT TO NEW TERMINATION BOX ADJACENT TO NEW PUMP CONTROL PANEL.
12. DISTURBED AREA AT PUMPING STATION NO. 1 IS 0.9 ACRES. TOTAL DISTURBED AREA FOR PROJECT IS 1.4 ACRES.

29 JUNE 2018

NORTH CAROLINA PROFESSIONAL SEAL 24494 ENGINEER GREGORY J. WELLS

WILLIS ENGINEERS, 10700 SIKES PLACE, CHARLOTTE, NORTH CAROLINA, 28277 - NC LIC. NO. F-0114

IN CHARGE GJW DESIGNED SEG MADE BY AMA CHECKED CAWjr	25' 0 25' 50'	RECORD DRAWING TO THE BEST OF OUR KNOWLEDGE AND BELIEF THIS RECORD DRAWING SUBSTANTIALLY REPRESENTS THE PROJECT AS CONSTRUCTED	willis ENGINEERS	WATER AND SEWER AUTHORITY OF CABARRUS COUNTY WASTEWATER FACILITIES	MT. PLEASANT PUMPING STATION NO. 1 NEW SITE PLAN	1968.010 01rec.DWG JUNE 2018	1

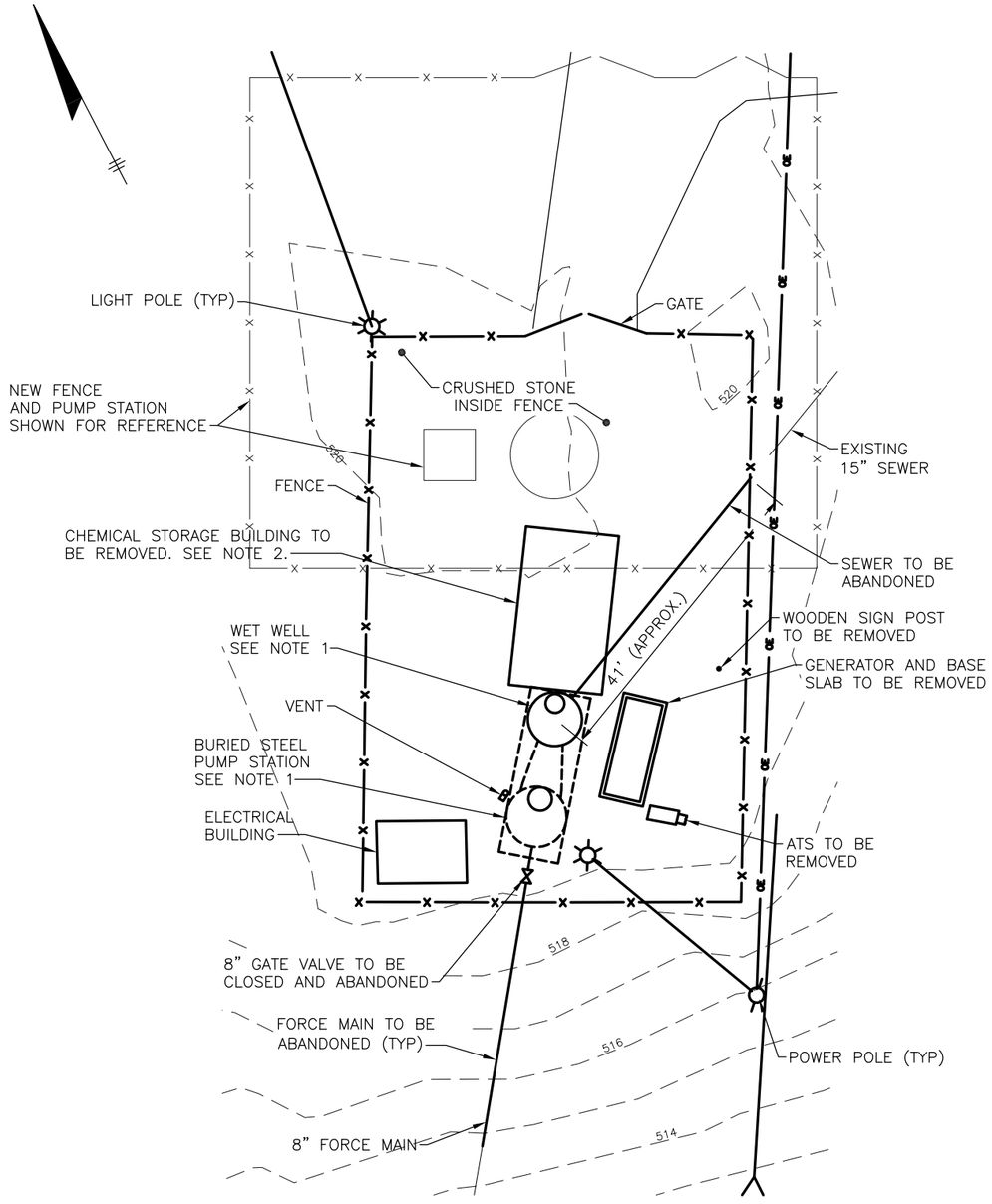

NOTE:

ITEMS SHOWN IN BOLD IN THIS PLAN SHALL BE REMOVED, RELOCATED OR DEMOLISHED AS NOTED.

EXISTING / DEMO SITE PLAN

NOTES:

1. EXISTING WET WELL AND BURIED STEEL PUMP STATION TO BE PARTIALLY REMOVED AND ABANDONED. SEE DEMO DETAIL ON THIS SHEET.
2. AS NOTED ON SHEET 1 CHEMICAL STORAGE BUILDING AND STORAGE TANKS SHALL BE TEMPORARILY RELOCATED DURING CONSTRUCTION.
3. UPON DEMOLITION ALL STONE WITHIN EXISTING FENCE, BUT OUTSIDE OF NEW FENCED AREA, SHALL BE REMOVED. THE AREA SHALL BE DRESSED AND GROUNDCOVER ESTABLISHED.

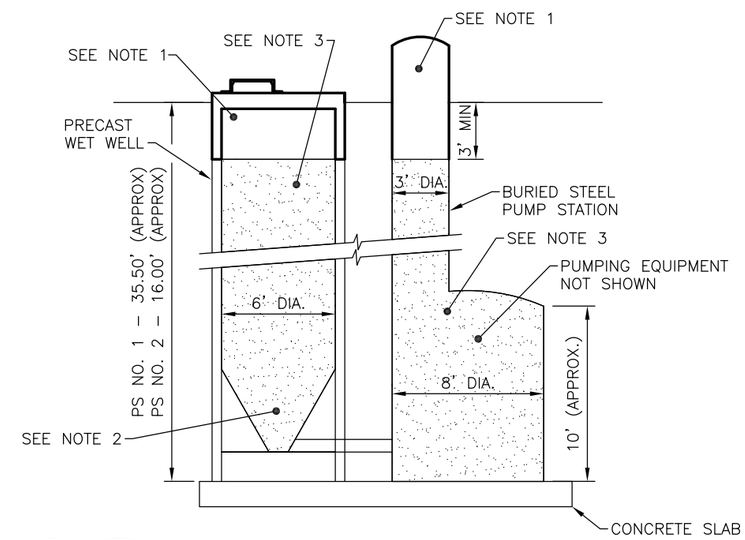

DEMO NOTES:

1. REMOVE TOP PORTION OF WET WELL AND PUMP STATION TO A MINIMUM OF 3' BELOW GRADE.
2. PLUG CONDUIT AND PIPE PENETRATIONS IN ABANDONED WET WELL AND PUMP STATION.
3. FILL ABANDONED WET WELL AND PUMP STATION WITH LOW STRENGTH GROUT.
4. IN EXCAVATED AREA, PROVIDE SUITABLE BACKFILL MATERIAL COMPACTED TO 95% OF THE MAXIMUM LABORATORY DRY DENSITY AS DETERMINED BY THE STANDARD PROCTOR METHOD TO WITHIN 8" OF FINISHED GRADE.
5. RESTORE GRADE WITH 8" OF CRUSHED STONE.

DEMO PLAN FOR EXISTING WET WELL AND PUMP STATION

29 JUNE 2018

NORTH CAROLINA PROFESSIONAL SEAL 24494 ENGINEER GREGORY J. WELLS

WILLIS ENGINEERS, 10700 SIKES PLACE, CHARLOTTE, NORTH CAROLINA, 28277 - NC LIC. NO. F-0114

IN CHARGE GJW DESIGNED SEG MADE BY AMA CHECKED CAWjr	2' 0 2' 4' 10' 0 10' 20'	RECORD DRAWING TO THE BEST OF OUR KNOWLEDGE AND BELIEF THIS RECORD DRAWING SUBSTANTIALLY REPRESENTS THE PROJECT AS CONSTRUCTED	willis ENGINEERS	WATER AND SEWER AUTHORITY OF CABARRUS COUNTY WASTEWATER FACILITIES	MT. PLEASANT PUMPING STATION NO. 1 ENLARGED DEMO SITE PLAN	1968.010 02rec.DWG JUNE 2018	2

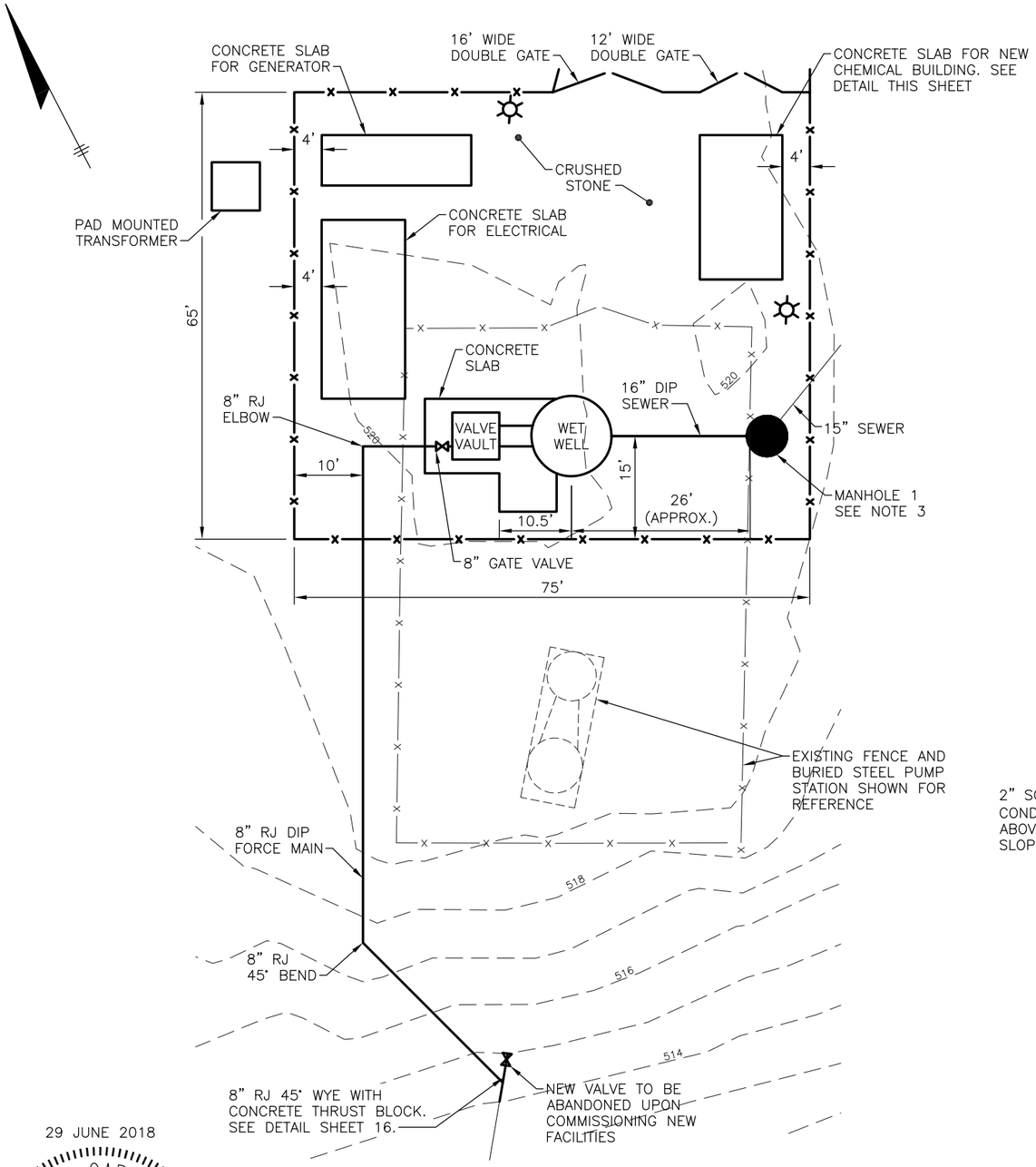

NOTE:

ITEMS SHOWN IN BOLD IN THIS PLAN ARE NEW.

NEW SITE PLAN

NOTES:

1. PROVIDE MIN. 8" ABC STONE INSIDE NEW FENCE. SLOPE AWAY FROM STRUCTURES.
2. PROVIDE 4" PVC DRAIN AND 2" SCH 80 PVC CONDUIT FROM CHEMICAL BUILDING SLAB SLOPED TOWARD WET WELL. IN 2" CONDUIT PROVIDE 1/2" CHEMICAL FEED TUBING FOR DISCHARGE INTO WET WELL.
3. MANHOLE 1 SHALL BE EQUIPPED WITH A BASKET SCREEN. SEE DETAIL ON SHEET 17.

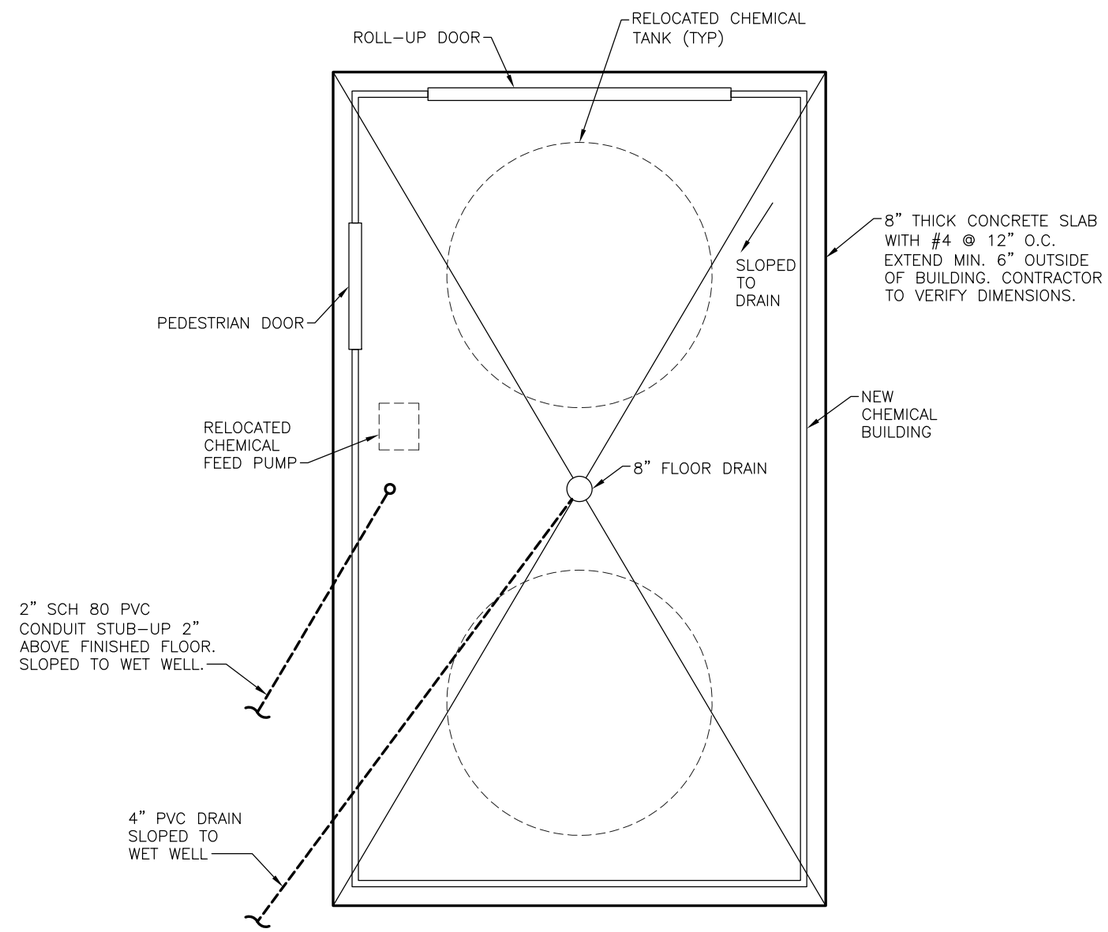

CONCRETE SLAB FOR NEW CHEMICAL BUILDING

29 JUNE 2018

NORTH CAROLINA PROFESSIONAL SEAL 24494 ENGINEER GREGORY J. WELLS

IN CHARGE GJW DESIGNED SEG MADE BY AMA CHECKED CAWjr	2' 0 2' 4' 10' 0 10' 20'	RECORD DRAWING TO THE BEST OF OUR KNOWLEDGE AND BELIEF THIS RECORD DRAWING SUBSTANTIALLY REPRESENTS THE PROJECT AS CONSTRUCTED	willis ENGINEERS	WATER AND SEWER AUTHORITY OF CABARRUS COUNTY WASTEWATER FACILITIES	MT. PLEASANT PUMPING STATION NO. 1 ENLARGED NEW SITE PLAN	1968.010 03rec.DWG JUNE 2018	3

WILLIS ENGINEERS, 10700 SIKES PLACE, CHARLOTTE, NORTH CAROLINA, 28277 – NC LIC. NO. F-0114

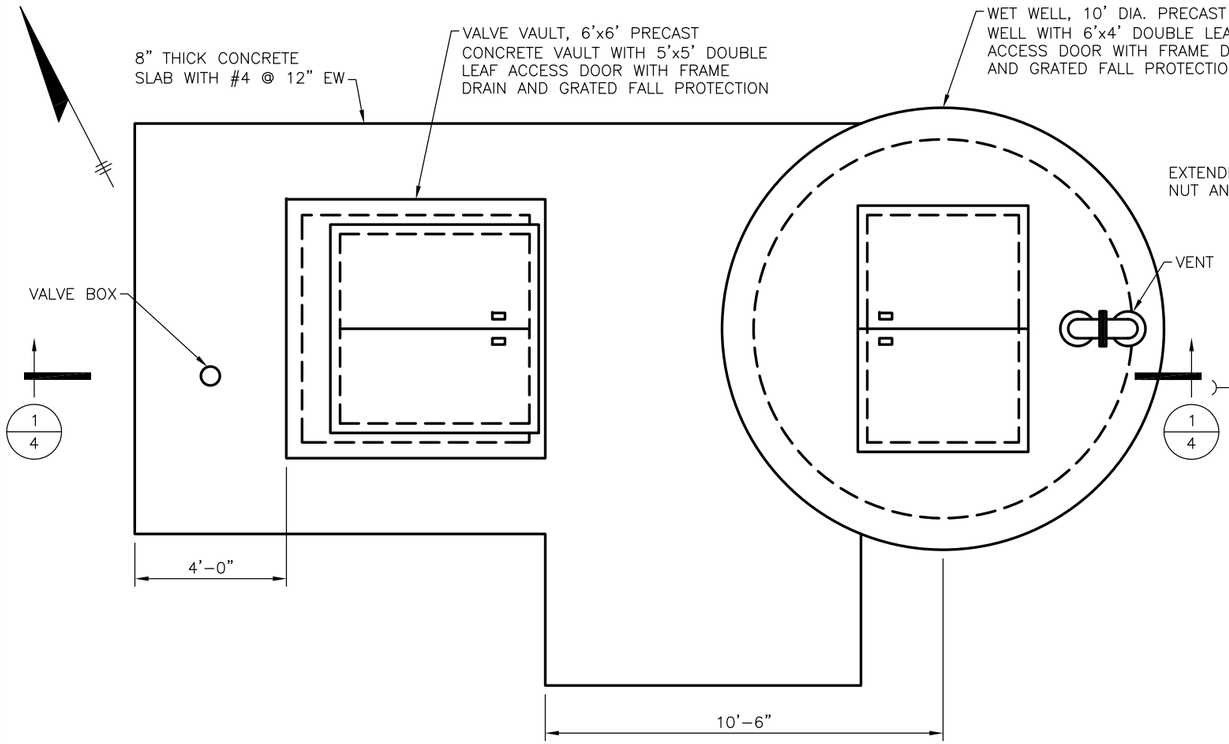

PLAN AT GRADE

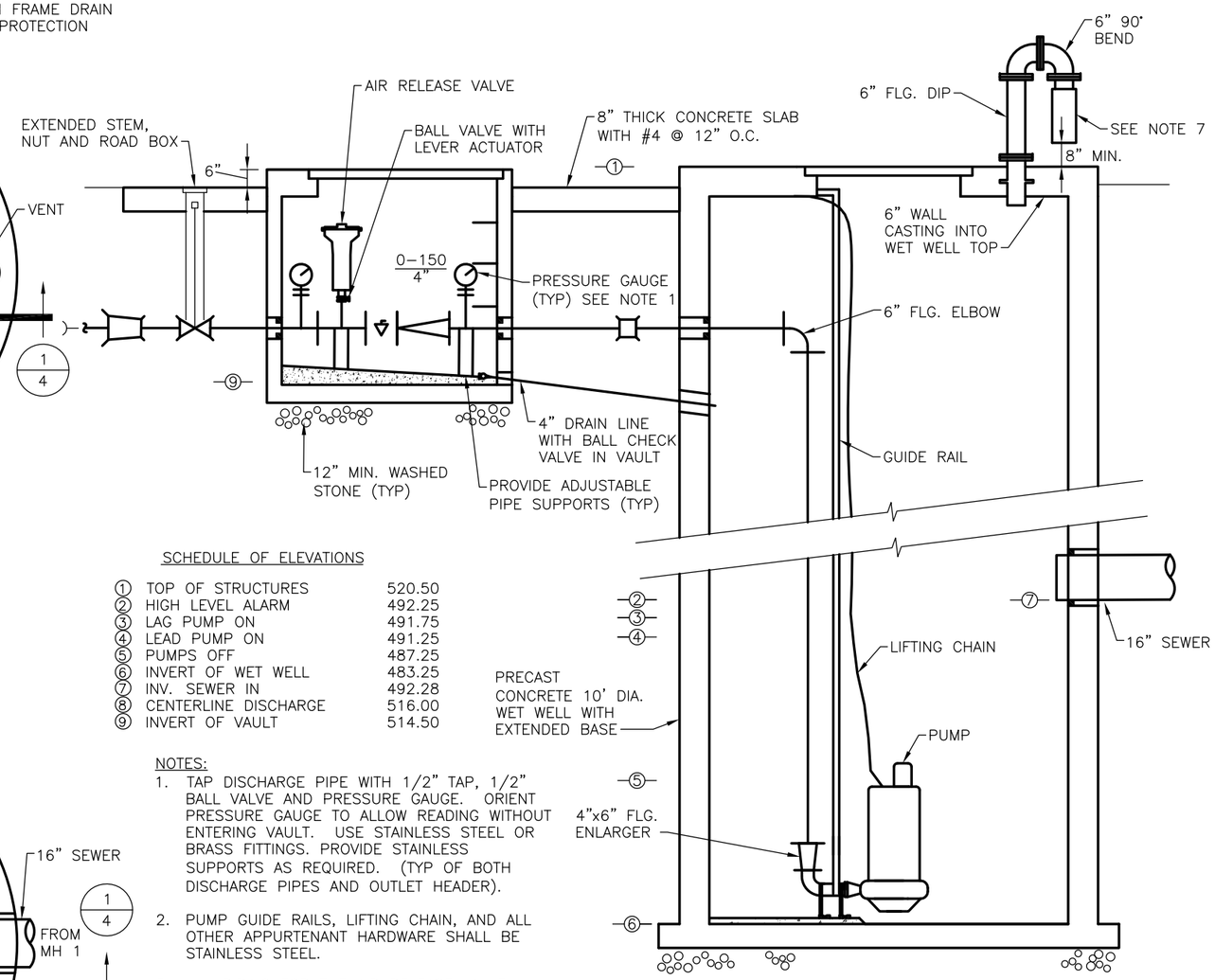

SECTION 1/4

SCHEDULE OF ELEVATIONS

1	TOP OF STRUCTURES	520.50
2	HIGH LEVEL ALARM	492.25
3	LAG PUMP ON	491.75
4	LEAD PUMP ON	491.25
5	PUMPS OFF	487.25
6	INVERT OF WET WELL	483.25
7	INV. SEWER IN	492.28
8	CENTERLINE DISCHARGE	516.00
9	INVERT OF VAULT	514.50

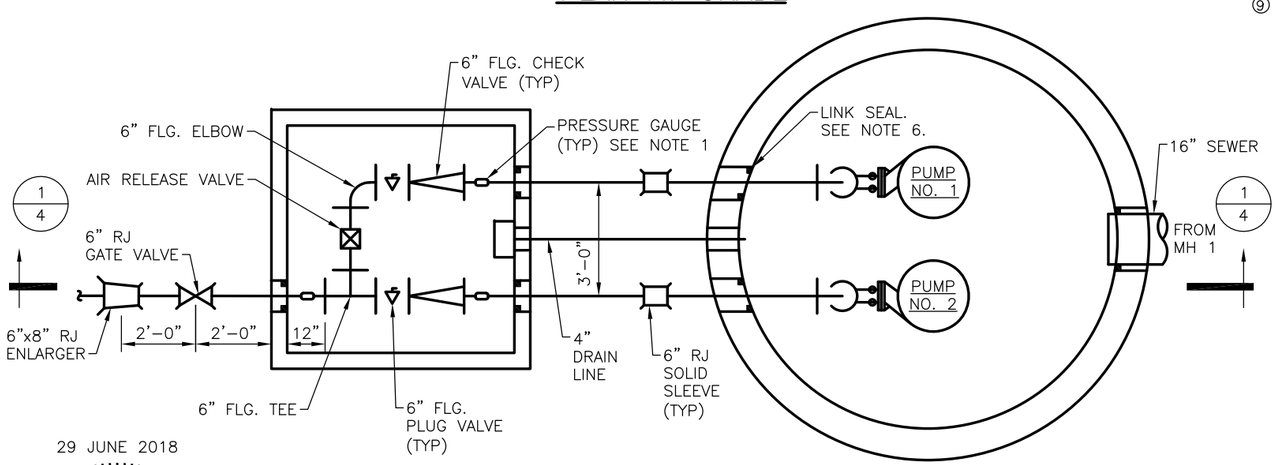

PLAN AT WET WELL

NOTES:

1. TAP DISCHARGE PIPE WITH 1/2" TAP, 1/2" BALL VALVE AND PRESSURE GAUGE. ORIENT PRESSURE GAUGE TO ALLOW READING WITHOUT ENTERING VAULT. USE STAINLESS STEEL OR BRASS FITTINGS. PROVIDE STAINLESS SUPPORTS AS REQUIRED. (TYP OF BOTH DISCHARGE PIPES AND OUTLET HEADER).
2. PUMP GUIDE RAILS, LIFTING CHAIN, AND ALL OTHER APPURTENANT HARDWARE SHALL BE STAINLESS STEEL.
3. ALL PIPING FOR THE AIR RELEASE VALVE SHALL BE STAINLESS STEEL WITH STAINLESS STEEL OR BRASS FITTINGS AND VALVES.
4. ALL DISCHARGE PIPING IN WET WELL AND VALVE VAULT SHALL BE FLANGED DIP. ALL BURIED PIPING SHALL BE RJ DIP USING "MEGA-LUG" TYPE ASSEMBLIES.
5. ALL DIP PIPING IN WET WELL AND VALVE VAULT SHALL BE PAINTED.
6. LINK SEALS SHALL BE PROVIDED AT PIPE PENETRATIONS AS SHOWN (INSIDE FACE).
7. PROVIDE PASSIVE VENT SCRUBBER AS MANUFACTURED BY PURAFIL.
8. WET WELL SHALL HAVE INTERIOR COATING SYSTEM SIMILAR TO THAT SPECIFIED FOR MANHOLES.

29 JUNE 2018

NORTH CAROLINA PROFESSIONAL SEAL 24494 ENGINEER GREGORY J. WELLS

WILLIS ENGINEERS, 10700 SIKES PLACE, CHARLOTTE, NORTH CAROLINA, 28277 - NC LIC. NO. F-0114

IN CHARGE	GJW
DESIGNED	SEG
MADE BY	AMA
CHECKED	CAWjr

2' 0 2' 4'

RECORD DRAWING
TO THE BEST OF OUR KNOWLEDGE AND BELIEF THIS RECORD DRAWING SUBSTANTIALLY REPRESENTS THE PROJECT AS CONSTRUCTED

willis ENGINEERS

WATER AND SEWER AUTHORITY OF CABARRUS COUNTY
WASTEWATER FACILITIES

MT. PLEASANT PUMPING STATION NO. 1
PLANS AND SECTION

1968.010
04rec.DWG
JUNE 2018

KVA LOAD	LOAD SERVED	WIRE SIZE	BRKR AMPS	CKT NO.	CKT NO.	BRKR AMPS	WIRE SIZE	LOAD SERVED	KVA LOAD
	SPARE (WELL HOUSING)		20	1	2	20	12	MCC LIGHT & RECEPT (G)	.8
	SPARE (WELL PUMP)		20	3	4	20	12	MCC HEATERS (G)	1.2
.4	GENSET RECEPT	12	20	5	6	20	12	LIGHTING	.4
.4	BATTERY CHARGER	12	20	7	8	20	8	SUMP PUMP	
2.5	ENGINE HEATER	8	30	9	10	20	12	PUMP CONTROL PANEL	.6
2.5				11	12	20	12	FLOW METER	.2
	SPARE (ODOR CONTROL)		20	13	14	20		SPACE ONLY	
.4	RECEPT – WET WELL	10	20	15	16	20		SPACE ONLY	
	SPACE ONLY			17	18	20		SPACE ONLY	
	SPACE ONLY			19	20				.6
	SPACE ONLY			21	22	20	12	CHEMICAL BUILDING	.6
	SPACE ONLY			23	24				.6
								SPACE ONLY	
	MAIN BREAKER		60					SPACE ONLY	
								SPACE ONLY	

NEUTRAL BUS | GROUND BAR

SQUARE D TYPE NQOD
LOCATED IN MCC
120/208V 3 PHASE 4 WIRE
10,000 AIC FULLY RATED

(G) = GFCI CIRCUIT BREAKER

PANEL A

REFERENCE NOTES

1. ROUTE CONDUITS MINIMUM 24" BELOW GRADE. USE SPACERS TO MAINTAIN 4" CLEAR BETWEEN CONDUITS. ENCASE IN CONCRETE, WITH MINIMUM 4" COVER ON ALL SIDES. PROVIDE MARKER TAPE, 8 TO 10 INCHES BELOW GRADE. TAPE SHALL BE OF BRIGHTLY COLORED 4 MIL PLASTIC, 6" WIDE, SUITABLE FOR DIRECT BURIAL.
2. COORDINATE WITH POWER UTILITY FOR INSTALLATION OF PRIMARY CABLE. PROVIDE CONDUIT SLEEVES UNDER PAVED AREAS IF REQUIRED.
3. PROVIDE 2"C SCH 80 PVC FOR TELEPHONE UTILITY CABLE. COORDINATE WITH UTILITY REPRESENTATIVE PRIOR TO ANY INSTALLATION.
4. PROVIDE GROUNDING ELECTRODE CONDUCTOR. #3/0 BARE COPPER DIRECT–BURIED 36" BELOW FINISHED GRADE. CONDUCTOR SHALL BE WITHOUT SPLICE FROM GROUND BUS IN MCC TO GENERATOR FRAME.
5. PROVIDE TWO SURFACE MOUNTED LED LUMINAIRES. TEMPERED GLASS LENS. MINIMUM 4000 LUMENS. FAIL SAFE FA1–LED–5MQ–WH OR EQUAL. ROUTE CIRCUIT UNDER SLAB, THEN UP ON COLUMN TO CANOPY ROOF.
6. PROVIDE MINIMUM 12'x26'x12" THICK CONCRETE SLAB WITH #4 @ 8" EW/T&B. ELECTRICAL EQUIPMENT SHALL BE ON A CONCRETE PAD 4" ABOVE THE TOP OF SLAB.
7. PROVIDE MINIMUM 10'x24' PRE–ENGINEERED, PRE–FINISHED ALUMINUM CANOPY OVER ELECTRICAL EQUIPMENT. CONTRACTOR SHALL VERIFY EXACT SIZE OF APPROVED ELECTRICAL EQUIPMENT AND PROVIDE DIMENSIONAL DRAWINGS OF CANOPY, CONCRETE SLAB/PAD AND EQUIPMENT FOR APPROVAL WITH CANOPY SHOP DRAWINGS.
8. PROVIDE SPARE CONDUITS AS SHOWN. LEAVE WITH PULL CAP OFF 24" BELOW GRADE FOR FUTURE USE. PROVIDE MARKER TAPES 8" BELOW GRADE AND RECORD EXACT LOCATIONS.

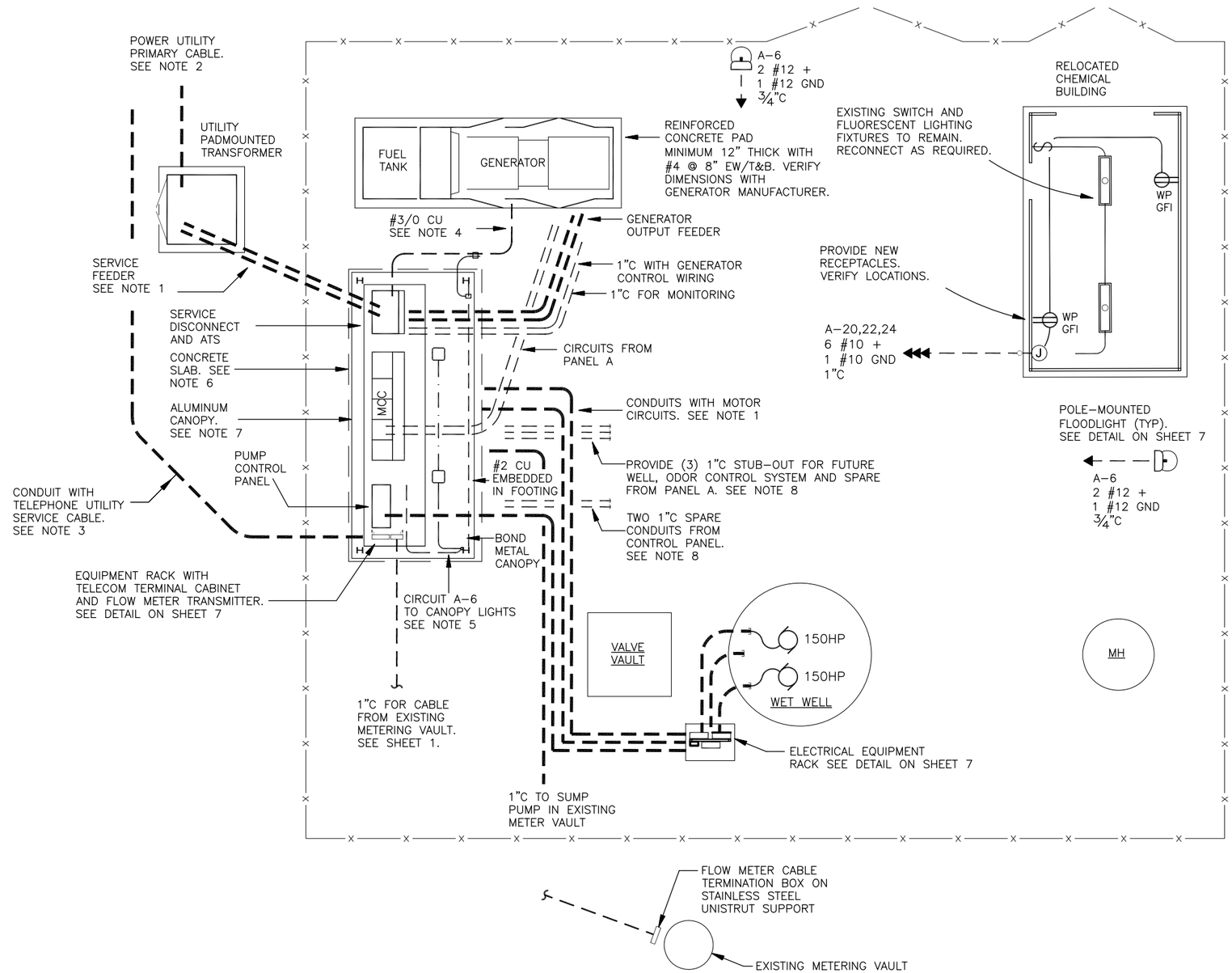

ELECTRICAL SITE PLAN

29 JUNE 2018

NORTH CAROLINA PROFESSIONAL SEAL 24494 ENGINEER GREGORY J. WELLS

IN CHARGE GJW DESIGNED WLE MADE BY WLE CHECKED CAWjr	5' 0 5' 10'	RECORD DRAWING TO THE BEST OF OUR KNOWLEDGE AND BELIEF THIS RECORD DRAWING SUBSTANTIALLY REPRESENTS THE PROJECT AS CONSTRUCTED	willis ENGINEERS	WATER AND SEWER AUTHORITY OF CABARRUS COUNTY WASTEWATER FACILITIES	MT. PLEASANT PUMPING STATION NO. 1 ELECTRICAL

1968.010
05rec.DWG
JUNE 2018

5

WILLIS ENGINEERS, 10700 SIKES PLACE, CHARLOTTE, NORTH CAROLINA, 28277 – NC LIC. NO. F–0114

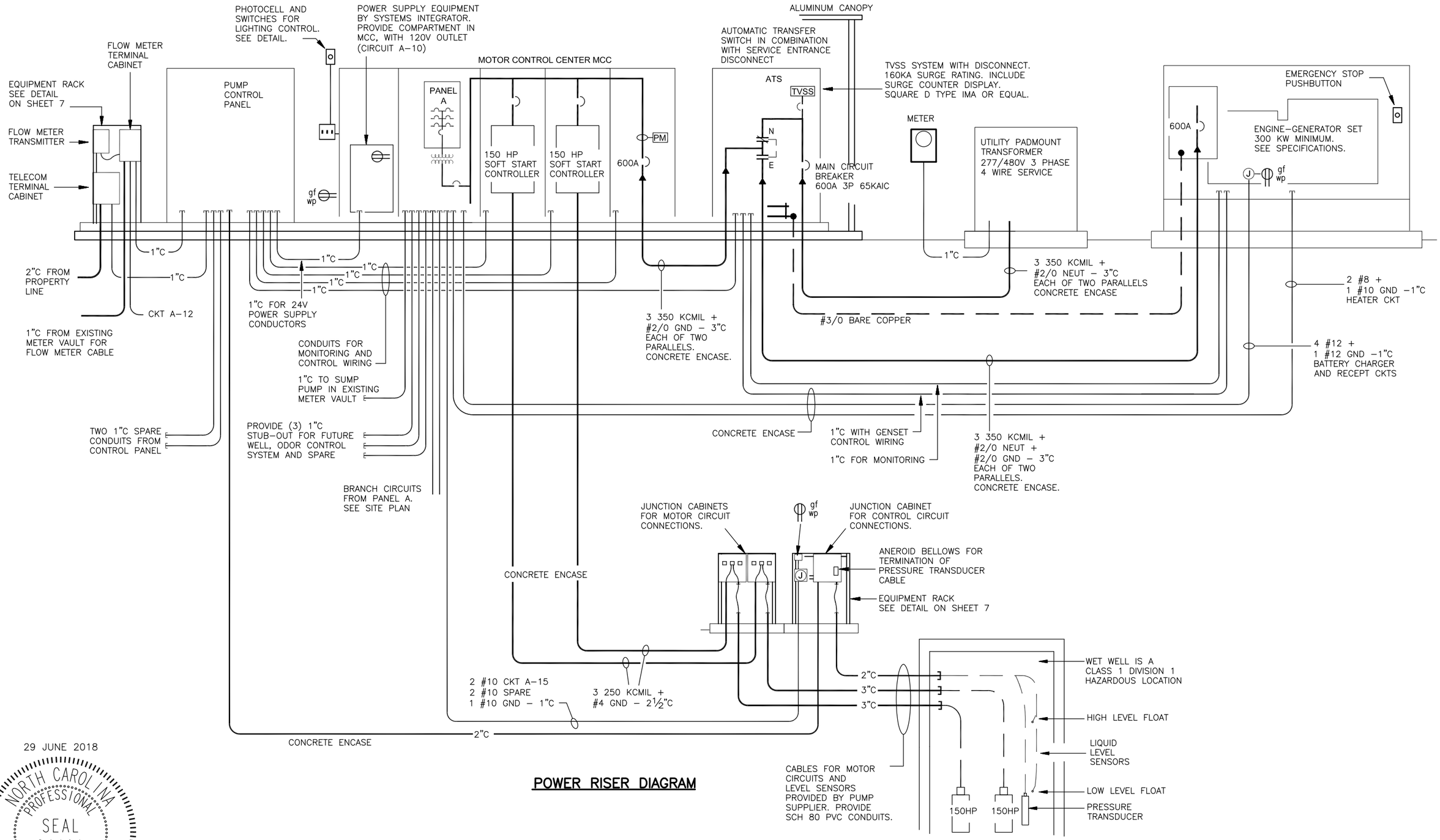

POWER RISER DIAGRAM

29 JUNE 2018

NORTH CAROLINA PROFESSIONAL SEAL 24494 ENGINEER GREGORY J. WELLS

IN CHARGE GJW DESIGNED WLE MADE BY WLE CHECKED CAWjr	NO SCALE	RECORD DRAWING TO THE BEST OF OUR KNOWLEDGE AND BELIEF THIS RECORD DRAWING SUBSTANTIALLY REPRESENTS THE PROJECT AS CONSTRUCTED	willis ENGINEERS	WATER AND SEWER AUTHORITY OF CABARRUS COUNTY WASTEWATER FACILITIES	MT. PLEASANT PUMPING STATION NO. 1 ELECTRICAL	1968.010 06rec.DWG JUNE 2018	6

WILLIS ENGINEERS, 10700 SIKES PLACE, CHARLOTTE, NORTH CAROLINA, 28277 – NC LIC. NO. F–0114

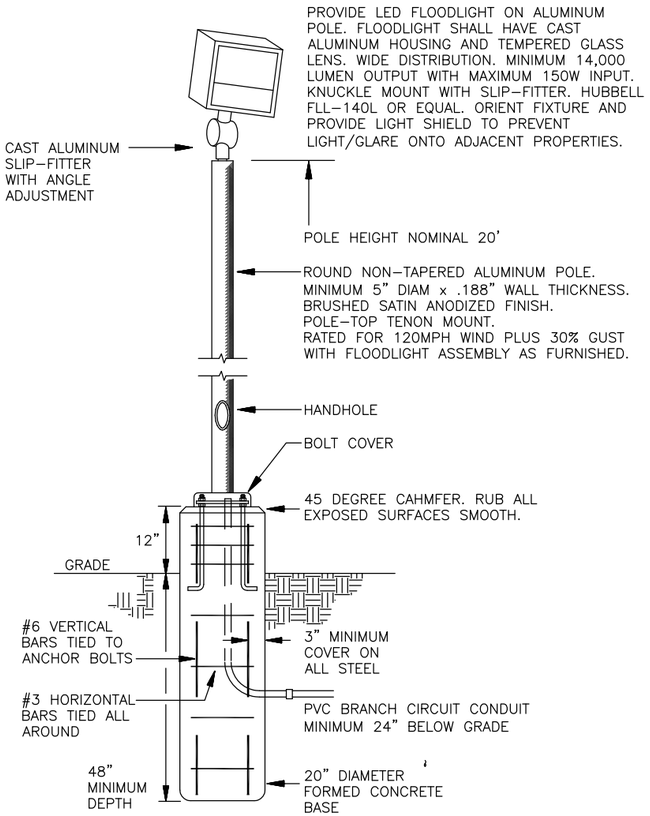

FLOODLIGHT DETAIL

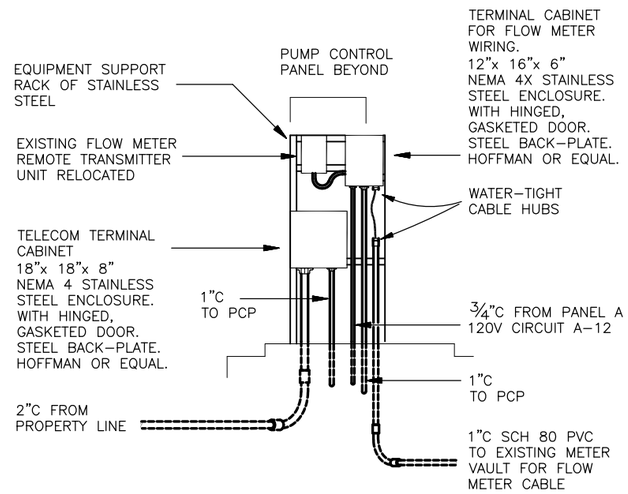

EQUIPMENT RACK AT PUMP CONTROL PANEL

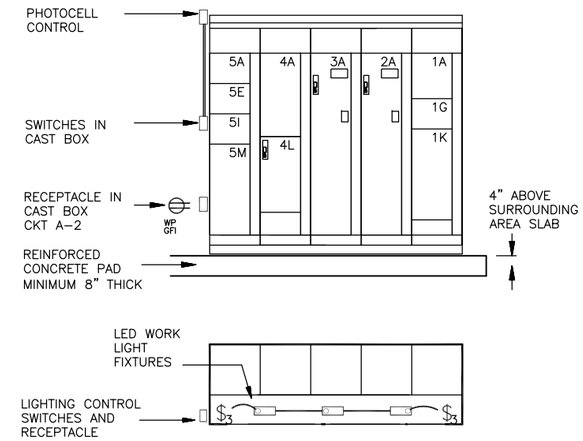

MOTOR CONTROL CENTER MCC

MOTOR CONTROL CENTER SHALL BE SQUARE D MODEL 6 OR APPROVED EQUAL, FOR 480V 3 PHASE 3 WIRE OPERATION. BUSSES SHALL BE OF TIN-PLATED COPPER, RATED NOT LESS THAN 300A (VERTICAL) AND 600A (HORIZONTAL), BRACED FOR FAULT CURRENT OF 65,000A RMS SYM. WIRING SHALL BE NEMA CLASS 1, TYPE B. ALL UNITS SHALL BE RATED MINIMUM 65,000 AIC. COORDINATE WITH SUPPLIERS OF PROCESS EQUIPMENT AND WITH SYSTEMS INTEGRATOR FOR CONTROL INTERFACES.
ENCLOSURE SHALL BE FREE-STANDING NEMA 3R NON-WALK-IN TYPE.

UNIT	LOAD SERVED	DEVICE DESCRIPTION
1A	SPACE	EQUIPPED SPACE
1G	METERING	DIGITAL METERING SYSTEM. LCD DISPLAY. WAVEFORM CAPTURE AND HIGH-SPEED TRANSIENT DETECTION. SQUARE D CM4000T OR EQUAL.
1K	MAIN BREAKER	600A 3P 480V CIRCUIT BREAKER. 65 KAIC. ELECTRONIC TRIP. SQUARE D LI FRAME OR EQUAL.
2A	PUMP 1 – 150HP	COMBINATION SOFT-START CONTROLLER AND CIRCUIT BREAKER DISCONNECT. CONTROLLER RATED FOR SEVERE DUTY APPLICATION. MINIMUM 150A @ 480V. BYPASS ISOLATION CONTACTOR AND NEMA RATED BYPASS CONTACTOR WITH FULL-VOLTAGE STARTING CAPABILITY. EQUIP CIRCUIT BREAKER WITH SHUNT TRIP, TO DISCONNECT POWER UPON STARTER FAULT.
3A	PUMP 2 – 150HP	COMBINATION SOFT-START CONTROLLER AND THERMAL-MAGNETIC CIRCUIT BREAKER DISCONNECT. SAME AS ABOVE.
4A	PANEL A	120/208V 3-PHASE 4-WIRE BRANCH CIRCUIT PANELBOARD. SEE SCHEDULE.
4L	TRANSFORMER	15 KVA DRY-TYPE TRANSFORMER, WITH PRIMARY CIRCUIT BREAKER. 480V TO 120/208V 3-PHASE. TO SERVE PANEL A.
5A	SPACE	EQUIPPED SPACE
5E	SPACE	EQUIPPED SPACE
5I	SPACE	EQUIPPED SPACE
5M	EQUIPMENT COMPARTMENT	36"H x 9"D COMPARTMENT FOR POWER SUPPLY EQUIPMENT TO BE INSTALLED BY SYSTEMS INTEGRATOR

CONTRACTOR SHALL PROVIDE ONE SPARE 150 HP SOFT-START CONTROLLER FOR THE CONTRACT IDENTICAL TO THOSE INCLUDED IN THE MCC, AND READY FOR FUTURE USE AS A REPLACEMENT.

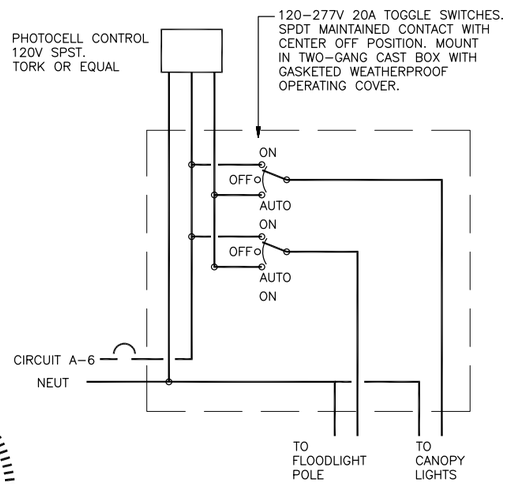

LIGHTING CONTROL

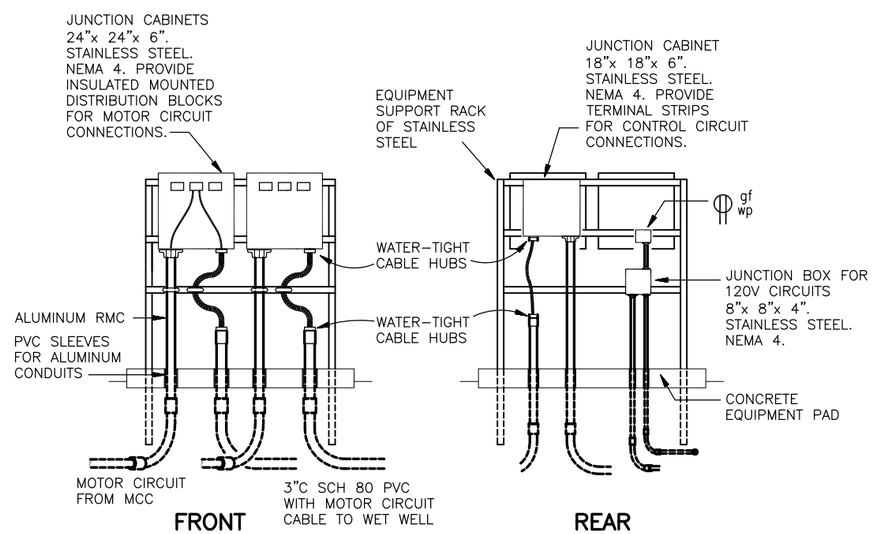

EQUIPMENT RACK AT WET WELL

29 JUNE 2018

NORTH CAROLINA PROFESSIONAL SEAL 24494 ENGINEER GREGORY J. WELLS

G J Wells

WILLIS ENGINEERS, 10700 SIKES PLACE, CHARLOTTE, NORTH CAROLINA, 28277 – NC LIC. NO. F-0114

IN CHARGE GJW DESIGNED WLE MADE BY WLE CHECKED CAWjr	NO SCALE	RECORD DRAWING TO THE BEST OF OUR KNOWLEDGE AND BELIEF THIS RECORD DRAWING SUBSTANTIALLY REPRESENTS THE PROJECT AS CONSTRUCTED	willis ENGINEERS	WATER AND SEWER AUTHORITY OF CABARRUS COUNTY WASTEWATER FACILITIES	MT. PLEASANT PUMPING STATION NO. 1 ELECTRICAL	1968.010 07rec.DWG JUNE 2018	7

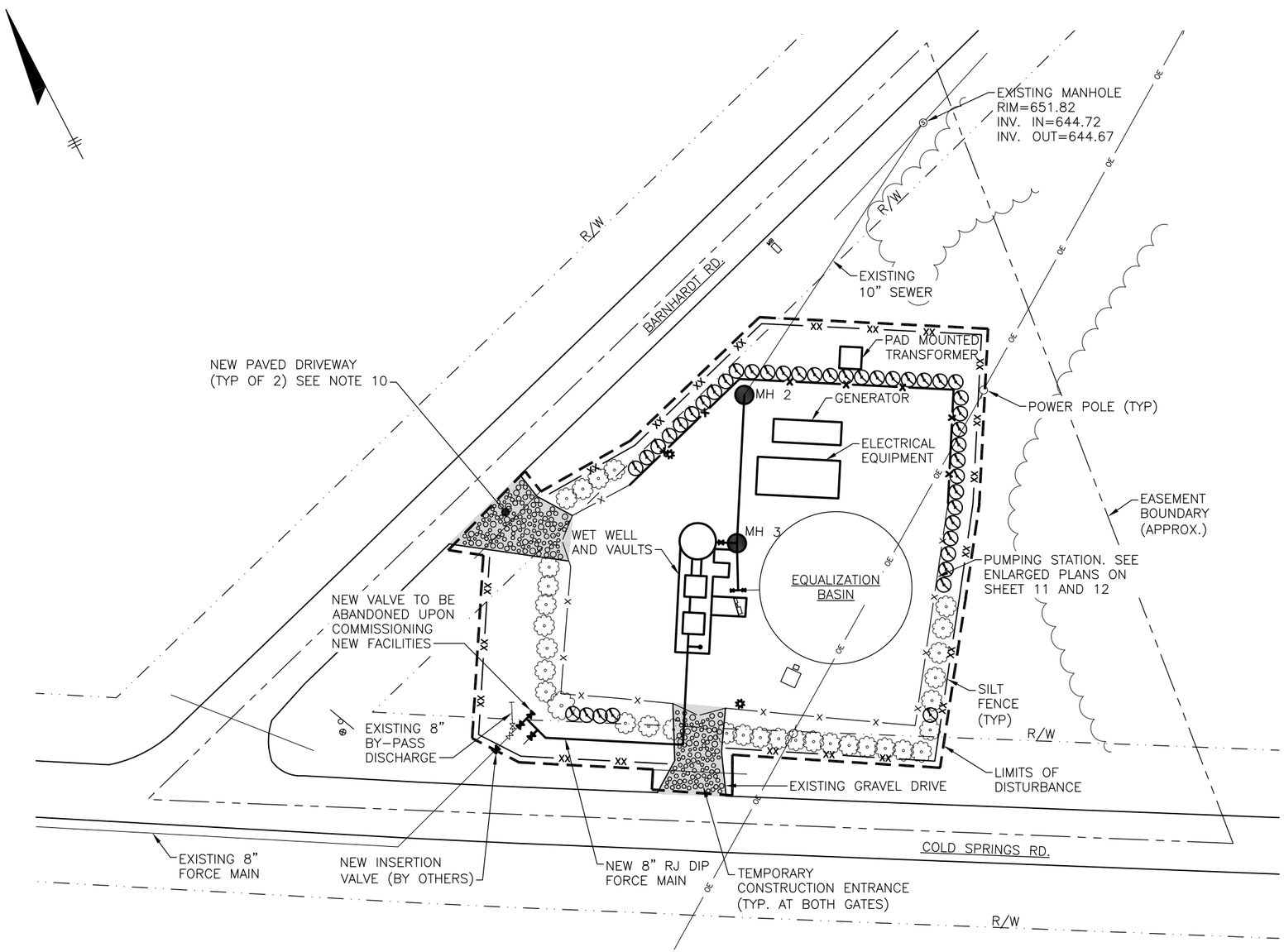

SITE PLAN NOTE:

SITE PLAN ON THIS SHEET REFLECTS NEW SITE PLAN. ITEMS SHOWN IN BOLD ARE NEW. SEE SHEET 9 FOR EXISTING SITE PLAN SHOWING EXISTING ITEMS TO BE REMOVED AND/OR ABANDONED.

SITE PLAN

PUMPING STATION NO. 2 GENERAL SEQUENCE OF WORK:

1. CONSTRUCT NEW WET WELL, VALVE VAULT, MANHOLE AND FORCE MAIN TO THE EXTENT POSSIBLE. PRESSURE TEST AS REQUIRED.
2. CONSTRUCT NEW ELECTRICAL WORK AND EXTEND FEEDERS TO POINTS OF CONNECTION TO THE EXTENT POSSIBLE.
3. INSTALL AND TEST NEW GENERATOR TO THE EXTENT POSSIBLE.
4. CONFIRM ALL EQUIPMENT AND MATERIALS FOR REMAINING WORK ARE ON-SITE PRIOR TO INTERRUPTION OF SERVICE.
5. INSTALL BY-PASS PUMPING SYSTEM.
6. UPON APPROVAL OF OWNER AND ENGINEER, PLUG DOWNSTREAM INVERT AT EXISTING MANHOLE AND ESTABLISH BY-PASS PUMPING.
7. UPON CONCURRENCE BY OWNER AND ENGINEER THAT BY-PASS PUMPING SYSTEM IS OPERATING AS INTENDED. COMPLETE CONSTRUCTION OF NEW FACILITIES, MAKE FINAL ELECTRICAL CONNECTIONS, COMPLETE TIE-INS AT SEWER AND FORCE MAIN CONNECTIONS.
8. PROVIDE START-UP AND TESTING OF NEW FACILITIES AND PLACE IN OPERATION.
9. LEAVE BY-PASS PUMPING SYSTEM IN PLACE UNTIL PROPER OPERATION OF NEW FACILITIES ARE CONFIRMED BY OWNER AND ENGINEER (MIN. 3 DAYS).
10. DEMO EXISTING FACILITIES AS SHOWN ON SHEET 9.

PUMPING STATION NO. 2 GENERAL NOTES:

1. ALL WORK SHALL BE COORDINATED WITH THE ENGINEER. CONTRACTOR SHALL SUBMIT A SCHEDULE AND WORK PLAN IN WRITING TO THE ENGINEER AND RECEIVE APPROVAL PRIOR TO BEGINNING WORK.
2. PUMPING STATION AND/OR BY-PASS PUMPING SYSTEM SHALL REMAIN IN SERVICE AT ALL TIMES.
3. SUCTION FOR BY-PASS PUMPING SYSTEM SHALL EXTEND INTO EXISTING WET WELL THROUGH MANHOLE OPENING AND DISCHARGE INTO EXISTING BY-PASS DISCHARGE. CONTRACTOR TO COORDINATE LOCATIONS OF BY-PASS PUMPS WITH ENGINEER AND OWNER.
4. THE PUMPING STATION AREA SHALL REMAIN CLOSED AND SECURED TO PREVENT ACCESS DURING NON-WORKING HOURS. CONTRACTOR SHALL PROVIDE TEMPORARY FENCE AND GATES AS REQUIRED FOR CONSTRUCTION AND TO ALLOW ACCESS TO EXISTING PUMPING STATION BY WSACC DURING CONSTRUCTION.
5. LOCATION OF EXISTING FACILITIES ARE APPROXIMATE AND NOT ALL BURIED PIPE AND ELECTRICAL CONDUITS ARE SHOWN. THE CONTRACTOR SHALL VERIFY THE LOCATION OF ALL UTILITIES. CONTRACTOR IS RESPONSIBLE FOR ALL DAMAGE TO EXISTING FACILITIES SCHEDULE TO REMAIN.
6. ALL MATERIAL GENERATED DURING DEMOLITION SHALL BE PROPERLY DISPOSED OF BY THE CONTRACTOR, UNLESS OTHERWISE NOTED.
7. THE CONTRACTOR IS SOLELY RESPONSIBLE FOR SITE SAFETY ASSOCIATED WITH ALL REQUIREMENTS CURRENTLY MANDATED BY THE OCCUPATIONAL SAFETY AND HEALTH ADMINISTRATION.
8. A BENCHMARK AND HORIZONTAL CONTROL WILL BE PROVIDED PRIOR TO CONSTRUCTION.
9. NEW FORCE MAIN SHALL HAVE A MINIMUM OF 3-FEET OF COVER AND SHALL MAINTAIN A NEGATIVE SLOPE FROM THE NEW VALVE VAULT TO THE POINT OF CONNECTION.
10. EXISTING GRAVEL DRIVEWAYS SHALL BE REPLACED WITH PAVED DRIVEWAYS FROM EDGE OF PAVEMENT TO OPENING IN FENCE OF GATE. ENSURE A MINIMUM OF 8" OF ABC STONE AS BASE WITH 2" OF I-2 ASPHALT.
11. DISTURBED AREA AT PUMPING STATION NO. 2 IS 0.5 ACRES. TOTAL DISTURBED ARE FOR PROJECT IS 1.4 ACRES.

29 JUNE 2018

NORTH CAROLINA PROFESSIONAL SEAL 24494 ENGINEER GREGORY J. WELLS

IN CHARGE GJW DESIGNED SEG MADE BY AMA CHECKED CAWjr	20' 0 20' 40'	RECORD DRAWING TO THE BEST OF OUR KNOWLEDGE AND BELIEF THIS RECORD DRAWING SUBSTANTIALLY REPRESENTS THE PROJECT AS CONSTRUCTED	willis ENGINEERS	WATER AND SEWER AUTHORITY OF CABARRUS COUNTY WASTEWATER FACILITIES	MT. PLEASANT PUMPING STATION NO. 2 NEW SITE PLAN	1968.010 08rec.DWG JUNE 2018	8

WILLIS ENGINEERS, 10700 SIKES PLACE, CHARLOTTE, NORTH CAROLINA, 28277 - NC LIC. NO. F-0114

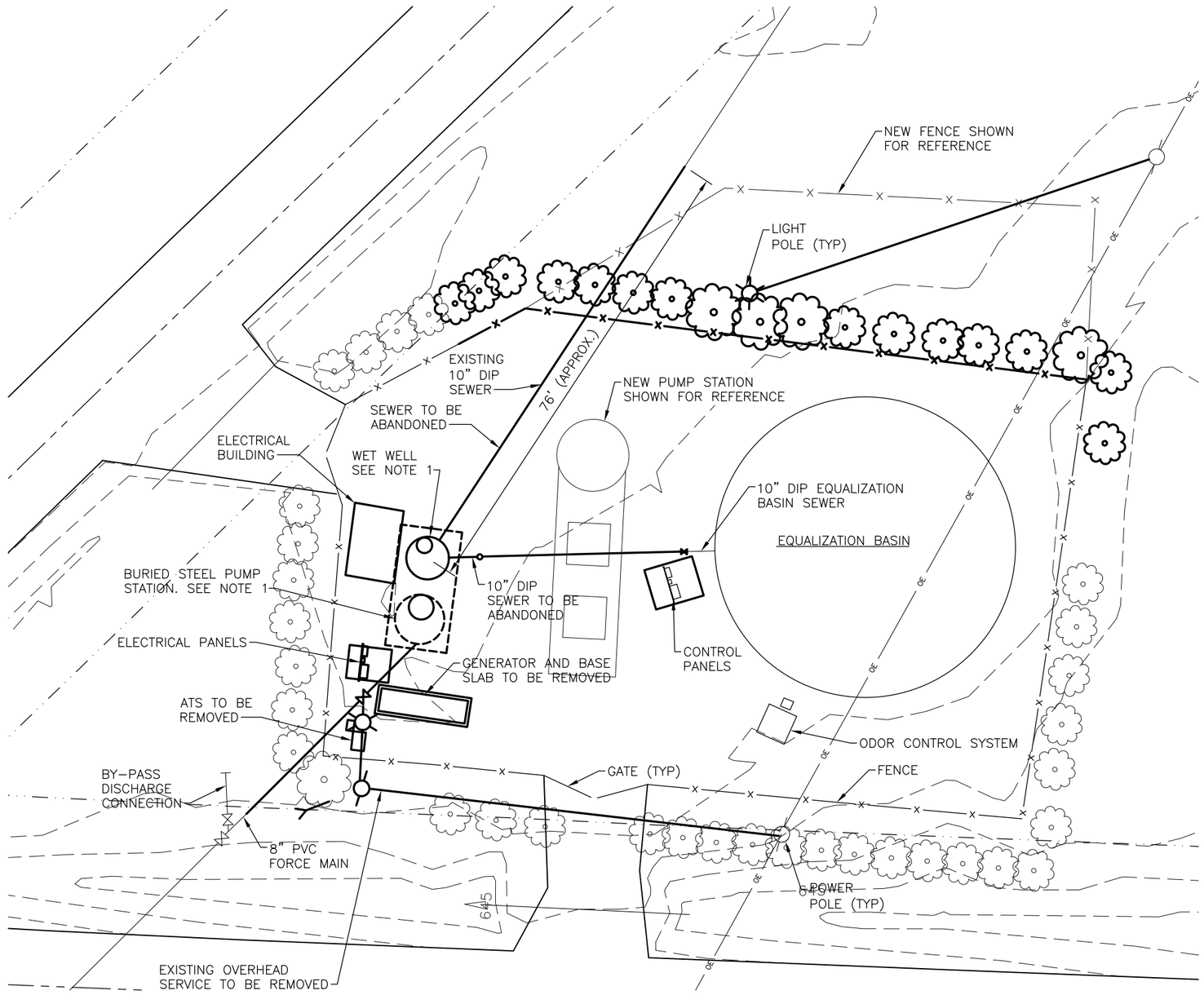

NOTES:

1. EXISTING WET WELL AND BURIED STEEL PUMP STATION TO BE PARTIALLY REMOVED AND ABANDONED. SEE DEMO DETAIL ON SHEET 2.
2. NEW 10" SEWER FROM EQUALIZATION BASIN SEWER TO MH 3 SHALL SLOPE TOWARD MH 3. VERIFY POINTS OF CONNECTION PRIOR TO CONSTRUCTION.

NOTE:

ITEMS SHOWN IN BOLD IN THIS PLAN SHALL BE REMOVED, RELOCATED OR DEMOLISHED AS NOTED.

EXISTING / DEMO SITE PLAN

29 JUNE 2018

NORTH CAROLINA PROFESSIONAL SEAL 24494 ENGINEER GREGORY J. WELLS

IN CHARGE GJW DESIGNED SEG MADE BY AMA CHECKED CAWjr	10' 0 10' 20'	RECORD DRAWING TO THE BEST OF OUR KNOWLEDGE AND BELIEF THIS RECORD DRAWING SUBSTANTIALLY REPRESENTS THE PROJECT AS CONSTRUCTED	willis ENGINEERS	WATER AND SEWER AUTHORITY OF CABARRUS COUNTY WASTEWATER FACILITIES	MT. PLEASANT PUMPING STATION NO. 2 ENLARGED DEMO SITE PLAN	1968.010 09rec.DWG JUNE 2018	9

WILLIS ENGINEERS, 10700 SIKES PLACE, CHARLOTTE, NORTH CAROLINA, 28277 – NC LIC. NO. F-0114

NOTES:

1. NEW 10" SEWER FROM EQUALIZATION BASIN SEWER TO MH 3 SHALL SLOPE TOWARD MH 3. VERIFY POINTS OF CONNECTION PRIOR TO CONSTRUCTION.
2. PROVIDE NEW 10" GATE VALVE WITH VALVE EXTENSION AND HANDWHEEL FLOOR STAND OPERATOR ON A 16"x16"x6" THICK CONCRETE PAD WITH 6x6/10:10 WWF.
3. EXISTING GRAVEL DRIVEWAYS SHALL BE REPLACED WITH PAVED DRIVEWAYS FROM EDGE OF PAVEMENT TO OPENING IN FENCE OF GATE. ENSURE A MINIMUM OF 8" OF ABC STONE AS BASE WITH 2" OF I-2 ASPHALT.

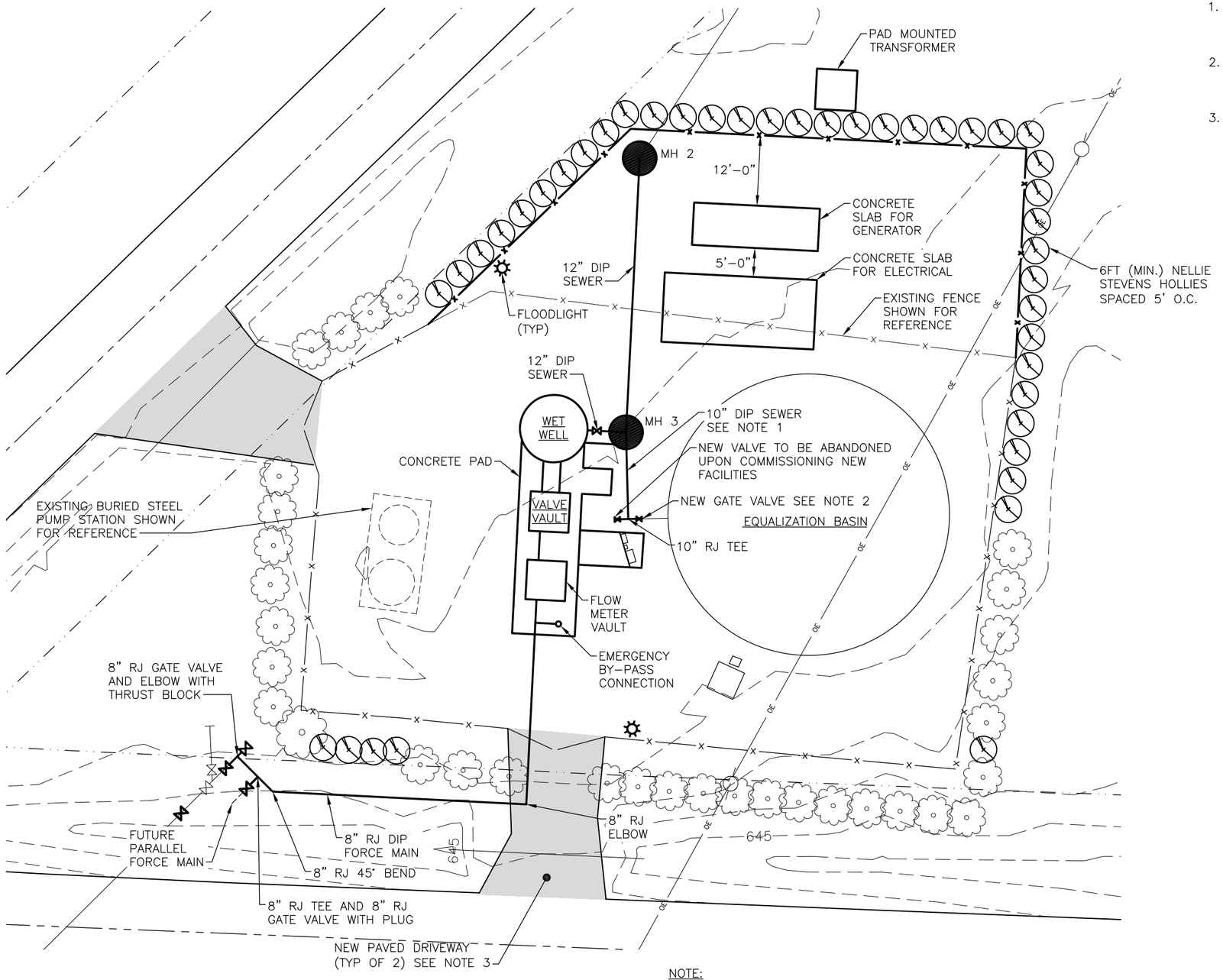

NEW SITE PLAN

NOTE:

ITEMS SHOWN IN BOLD IN THIS PLAN ARE NEW.

29 JUNE 2018

NORTH CAROLINA PROFESSIONAL SEAL 24494 ENGINEER GREGORY J. WELLS

IN CHARGE GJW DESIGNED SEG MADE BY AMA CHECKED CAWjr	10' 0 10' 20'	RECORD DRAWING TO THE BEST OF OUR KNOWLEDGE AND BELIEF THIS RECORD DRAWING SUBSTANTIALLY REPRESENTS THE PROJECT AS CONSTRUCTED	willis ENGINEERS	WATER AND SEWER AUTHORITY OF CABARRUS COUNTY WASTEWATER FACILITIES	MT. PLEASANT PUMPING STATION NO. 2 ENLARGED NEW SITE PLAN	1968.010 10rec.DWG JUNE 2018	10

WILLIS ENGINEERS, 10700 SIKES PLACE, CHARLOTTE, NORTH CAROLINA, 28277 - NC LIC. NO. F-0114

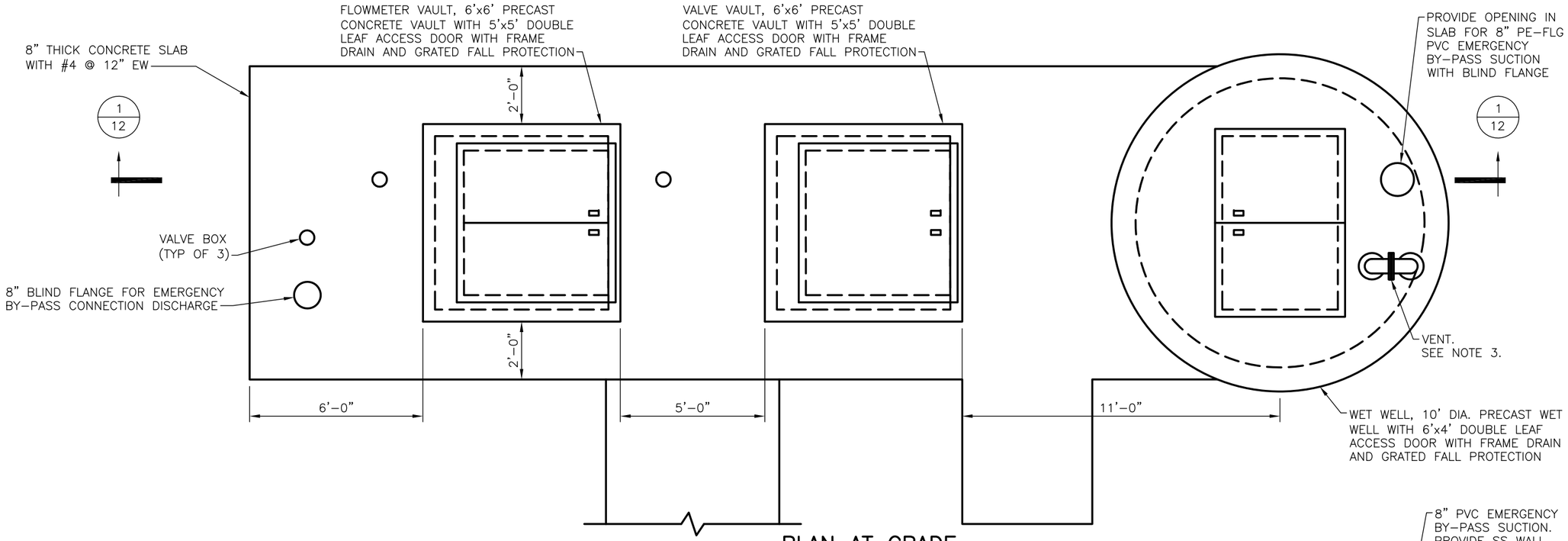

PLAN AT GRADE

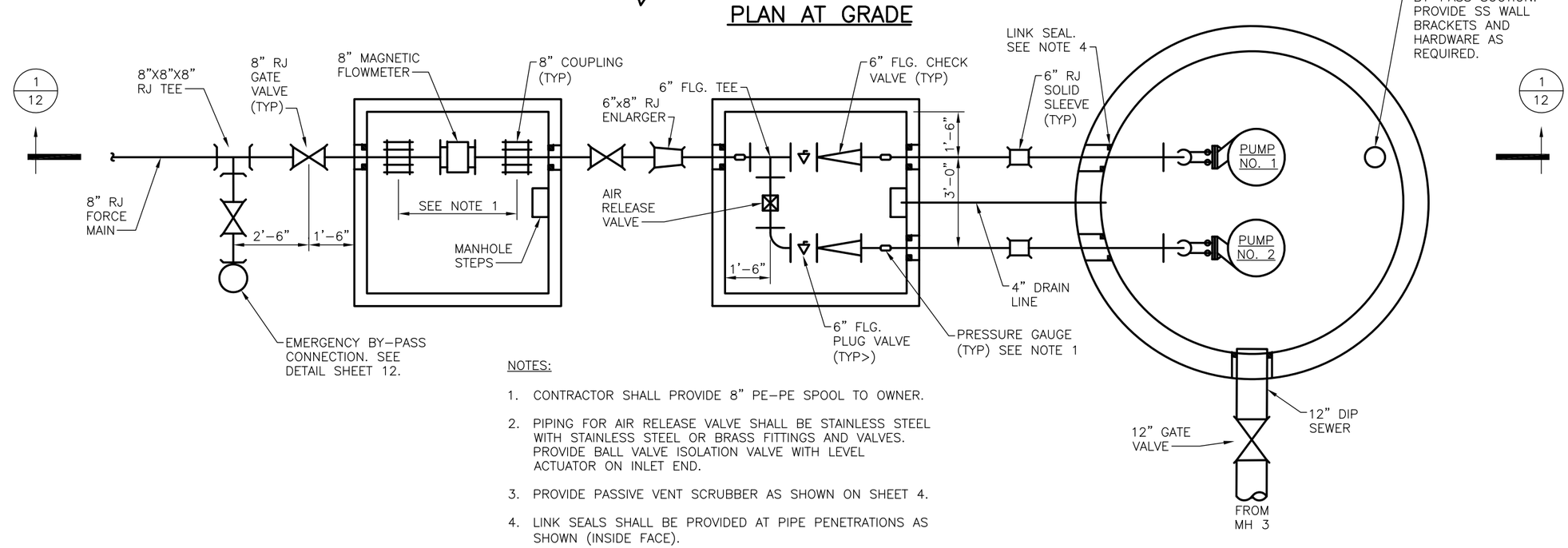

PLAN AT WET WELL

NOTES:

1. CONTRACTOR SHALL PROVIDE 8" PE-PE SPOOL TO OWNER.
2. PIPING FOR AIR RELEASE VALVE SHALL BE STAINLESS STEEL WITH STAINLESS STEEL OR BRASS FITTINGS AND VALVES. PROVIDE BALL VALVE ISOLATION VALVE WITH LEVEL ACTUATOR ON INLET END.
3. PROVIDE PASSIVE VENT SCRUBBER AS SHOWN ON SHEET 4.
4. LINK SEALS SHALL BE PROVIDED AT PIPE PENETRATIONS AS SHOWN (INSIDE FACE).

29 JUNE 2018

NORTH CAROLINA PROFESSIONAL SEAL 24494 ENGINEER GREGORY J. WELLS

IN CHARGE GJW DESIGNED SEG MADE BY AMA CHECKED CAWjr	2' 0 2' 4'	RECORD DRAWING TO THE BEST OF OUR KNOWLEDGE AND BELIEF THIS RECORD DRAWING SUBSTANTIALLY REPRESENTS THE PROJECT AS CONSTRUCTED	willis ENGINEERS	WATER AND SEWER AUTHORITY OF CABARRUS COUNTY WASTEWATER FACILITIES	MT. PLEASANT PUMPING STATION NO. 2 PLANS	1968.010 11rec.DWG JUNE 2018	11

WILLIS ENGINEERS, 10700 SIKES PLACE, CHARLOTTE, NORTH CAROLINA, 28277 - NC LIC. NO. F-0114

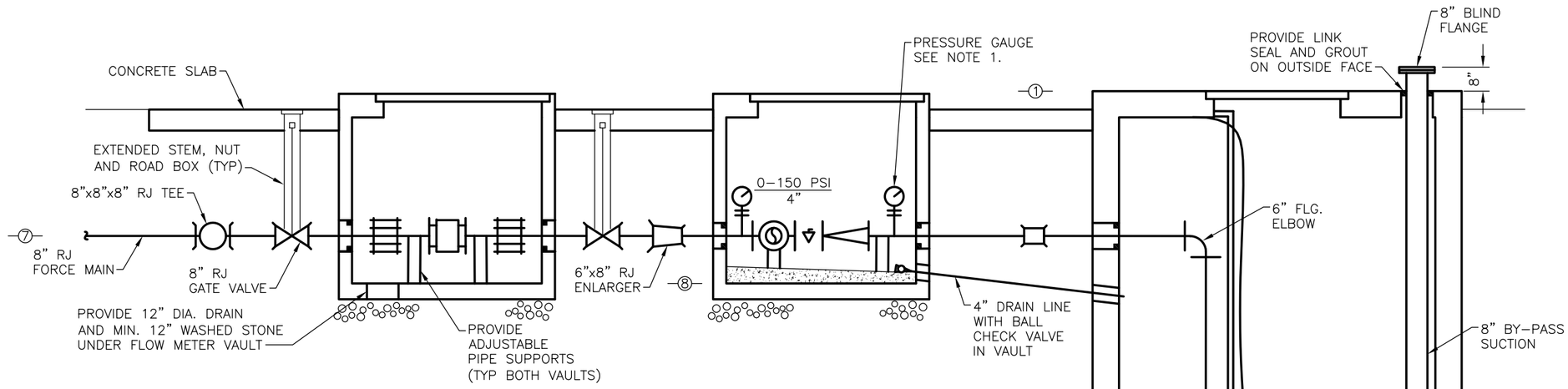

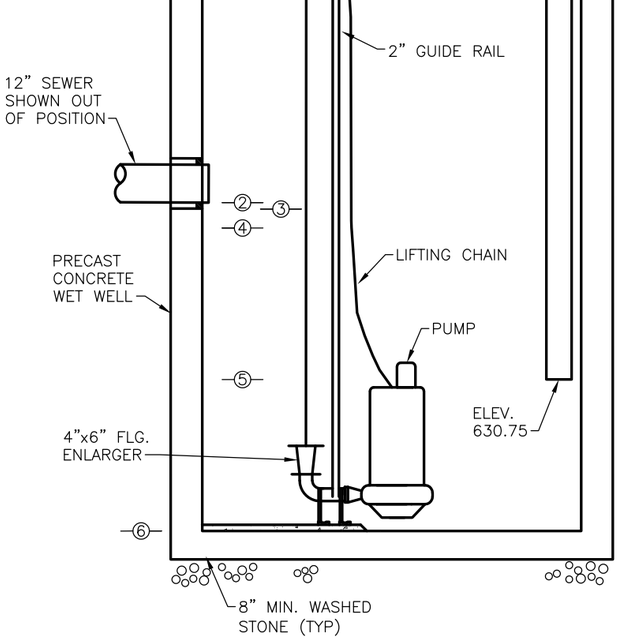

SCHEDULE OF ELEVATIONS

①	TOP OF STRUCTURES	650.00
②	INVERT SEWER IN	635.42
③	LAG PUMP ON	635.25
④	LEAD PUMP ON	634.75
⑤	PUMPS OFF	630.75
⑥	INVERT OF WET WELL	626.75
⑦	CENTERLINE DISCHARGE	645.50
⑧	INVERT OF VAULT	644.00

NOTES:

1. TAP DISCHARGE PIPE WITH 1/2" TAP, 1/2" BALL VALVE AND PRESSURE GAUGE. ORIENT PRESSURE GAUGE TO ALLOW READING WITHOUT ENTERING VAULT. USE STAINLESS STEEL OR BRASS FITTINGS. PROVIDE STAINLESS SUPPORTS AS REQUIRED. (TYP OF BOTH DISCHARGE PIPES AND OUTLET HEADER).
2. PUMP GUIDE RAILS, LIFTING CHAIN, SENSOR BRACKET AND ALL OTHER APPURTENANT HARDWARE SHALL BE STAINLESS STEEL.
3. ALL DISCHARGE PIPING IN WET WELL AND VALVE VAULT SHALL BE FLANGED DIP. ALL BURIED PIPING SHALL BE RJ DIP USING "MEGA–LUG" TYPE ASSEMBLIES.
4. ALL DIP PIPING IN WET WELL, VALVE VAULT AND FLOWMETER VAULT SHALL BE PAINTED.
5. WET WELL SHALL HAVE INTERIOR COATING SYSTEM SIMILAR TO THAT SPECIFIED FOR MANHOLES.

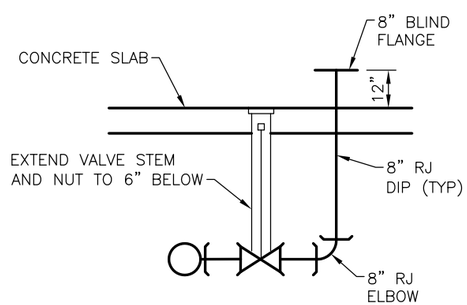

EMERGENCY BY–PASS CONNECTION

SECTION 1/12

29 JUNE 2018

NORTH CAROLINA PROFESSIONAL SEAL 24494 ENGINEER GREGORY J. WELLS

IN CHARGE	GJW
DESIGNED	SEG
MADE BY	AMA
CHECKED	CAWjr

2' 0 2' 4'

RECORD DRAWING
TO THE BEST OF OUR KNOWLEDGE AND BELIEF THIS RECORD DRAWING SUBSTANTIALLY REPRESENTS THE PROJECT AS CONSTRUCTED

willis ENGINEERS

WATER AND SEWER AUTHORITY OF CABARRUS COUNTY
WASTEWATER FACILITIES

MT. PLEASANT PUMPING STATION NO. 2
SECTION AND DETAIL

1968.010
12rec.DWG
JUNE 2018

12

WILLIS ENGINEERS, 10700 SIKES PLACE, CHARLOTTE, NORTH CAROLINA, 28277 – NC LIC. NO. F–0114

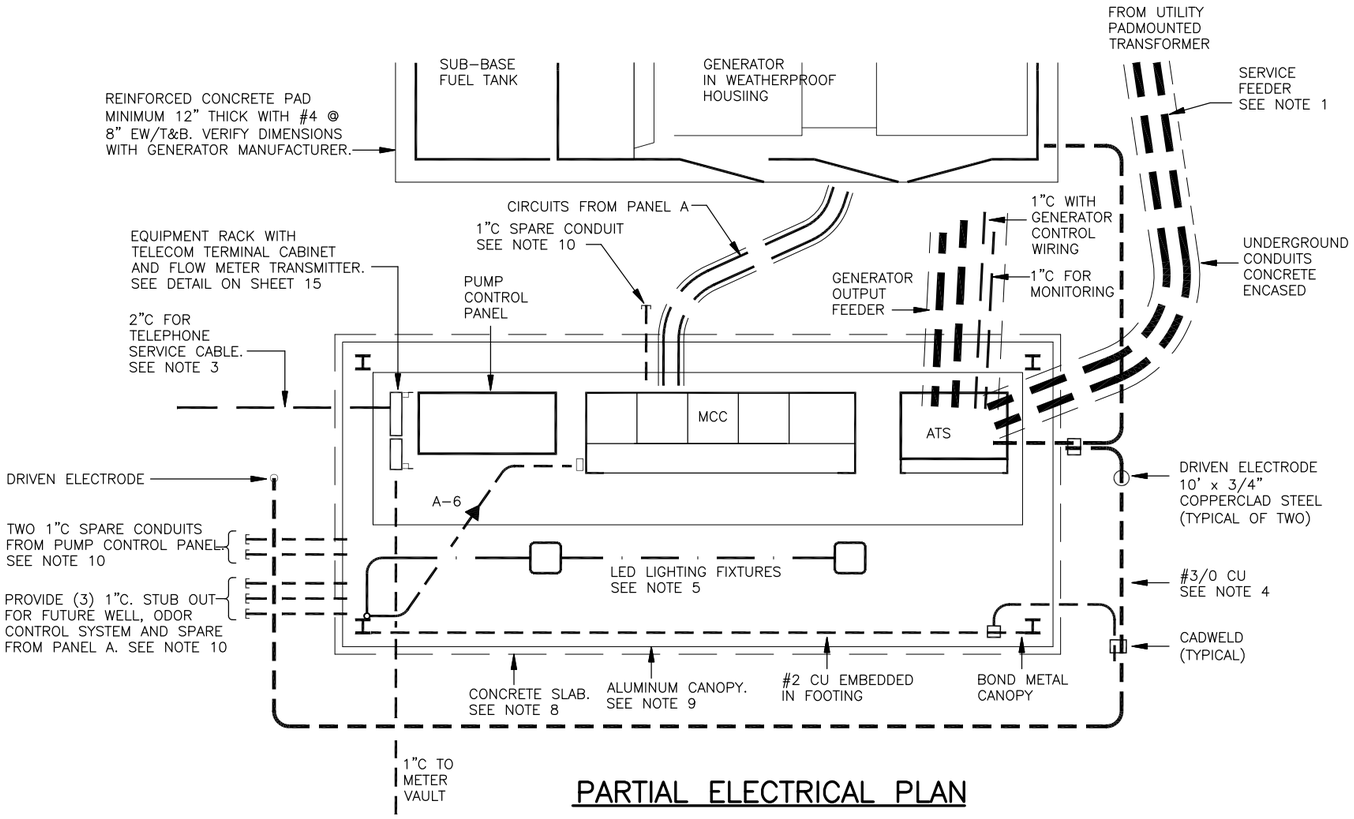

PARTIAL ELECTRICAL PLAN

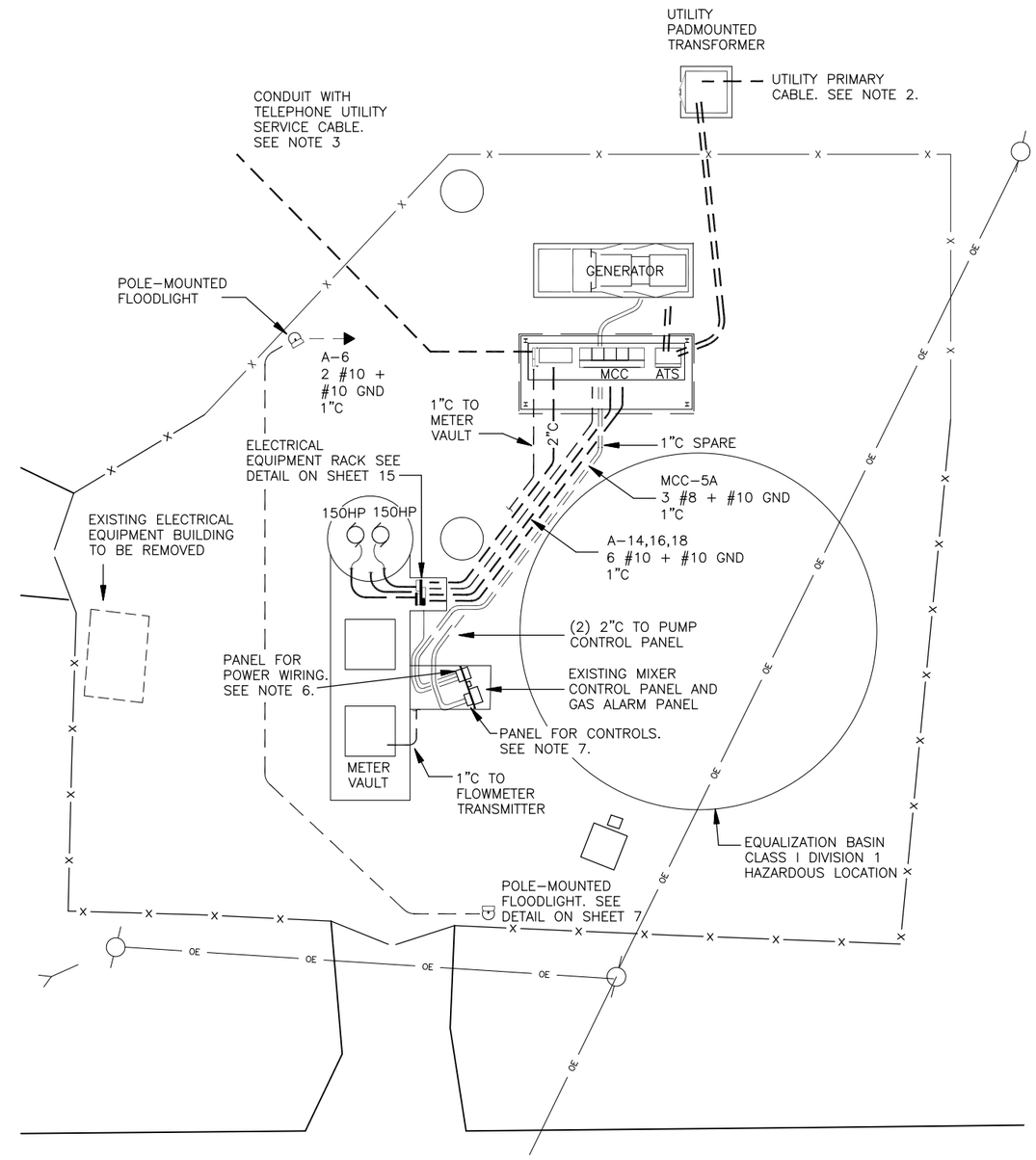

ELECTRICAL SITE PLAN

REFERENCE NOTES

1. ROUTE CONDUITS MINIMUM 24" BELOW GRADE. USE SPACERS TO MAINTAIN 4" CLEAR BETWEEN CONDUITS. ENCASE IN CONCRETE, WITH MINIMUM 4" COVER ON ALL SIDES. PROVIDE MARKER TAPE, 8 TO 10 INCHES BELOW GRADE. TAPE SHALL BE OF BRIGHTLY COLORED 4 MIL PLASTIC, 6" WIDE, SUITABLE FOR DIRECT BURIAL.
2. COORDINATE WITH POWER UTILITY FOR INSTALLATION OF PRIMARY CABLE. PROVIDE CONDUIT SLEEVES UNDER PAVED AREAS IF REQUIRED. PROVIDE CONCRETE TRANSFORMER PAD AS REQUIRED.
3. PROVIDE 2"C SCH 80 PVC FOR TELEPHONE UTILITY CABLE. COORDINATE WITH UTILITY REPRESENTATIVE PRIOR TO ANY INSTALLATION.
4. PROVIDE GROUNDING ELECTRODE CONDUCTOR. #3/0 BARE COPPER DIRECT-BURIED 36" BELOW FINISHED GRADE. BOND TO GENERATOR FRAME, CANOPY STRUCTURE, SERVICE ENTRANCE GROUND BUS, AND MADE ELECTRODES AS SHOWN.
5. PROVIDE TWO SURFACE MOUNTED LED LUMINAIRES. TEMPERED GLASS LENS. MINIMUM 4000 LUMENS. FAIL SAFE FA1-LED-5MQ-WH OR EQUAL. ROUTE CIRCUIT UNDER SLAB, THEN UP ON COLUMN TO CANOPY ROOF.
6. PROVIDE 20"x20"x12" NEMA 4X STAINLESS STEEL PANEL MOUNTED TO EXISTING RACK TO INTERCEPT EXISTING POWER CIRCUIT CONDUITS FROM EQ BASIN CONTROL PANELS. PULL NEW CIRCUITS AS REQUIRED AND REFEED EXISTING EQUIPMENT. INCLUDE SPARE 2"C FROM MCC SECTION 4 TO PULL BOX.
7. PROVIDE 20"x20"x12" NEMA 4X STAINLESS STEEL PANEL MOUNTED TO EXISTING RACK TO INTERCEPT EXISTING CONDUITS CONTAINING CONTROL AND COMMUNICATIONS WIRING FROM EQ BASIN CONTROL PANELS. FROM PULL BOX, PROVIDE TWO 2"C TO THE NEW PUMP CONTROL PANEL.
8. PROVIDE MINIMUM 12'x26'x12" THICK CONCRETE SLAB WITH #4 @ 8" EW/T&B. ELECTRICAL EQUIPMENT SHALL BE ON A CONCRETE PAD 4" ABOVE THE TOP OF SLAB.
9. PROVIDE MINIMUM 10'x24' PRE-ENGINEERED, PRE-FINISHED ALUMINUM CANOPY OVER ELECTRICAL EQUIPMENT. CONTRACTOR SHALL VERIFY EXACT SIZE OF APPROVED ELECTRICAL EQUIPMENT AND PROVIDE DIMENSIONAL DRAWINGS OF CANOPY, CONCRETE SLAB/PAD AND EQUIPMENT FOR APPROVAL WITH CANOPY SHOP DRAWINGS.
10. PROVIDE SPARE CONDUITS AS SHOWN. LEAVE WITH PULL WIRES. CAP OFF 24" BELOW GRADE FOR FUTURE USE. PROVIDE MARKER TAPES 8" BELOW GRADE AND RECORD EXACT LOCATIONS.

29 JUNE 2018

NORTH CAROLINA PROFESSIONAL SEAL 24494 ENGINEER GREGORY J. WELLS

WILLIS ENGINEERS, 10700 SIKES PLACE, CHARLOTTE, NORTH CAROLINA, 28277 - NC LIC. NO. F-0114

IN CHARGE GJW DESIGNED WLE MADE BY WLE CHECKED CAWjr	2.5' 0 2.5' 5' 10' 0 10' 20'	RECORD DRAWING TO THE BEST OF OUR KNOWLEDGE AND BELIEF THIS RECORD DRAWING SUBSTANTIALLY REPRESENTS THE PROJECT AS CONSTRUCTED	willis ENGINEERS	WATER AND SEWER AUTHORITY OF CABARRUS COUNTY WASTEWATER FACILITIES	MT. PLEASANT PUMPING STATION NO. 2 ELECTRICAL	1968.010 13rec.DWG JUNE 2018	13

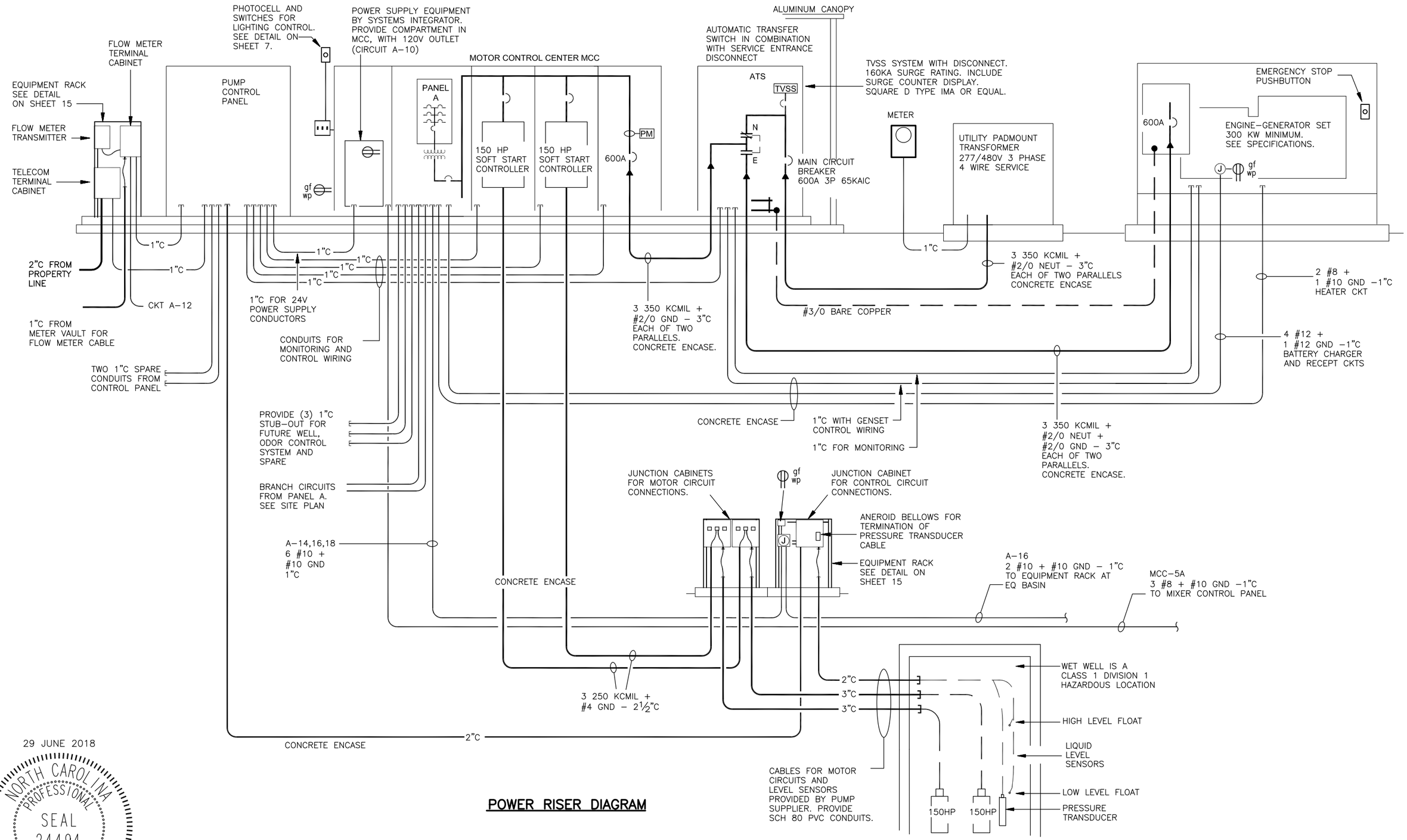

POWER RISER DIAGRAM

29 JUNE 2018

NORTH CAROLINA PROFESSIONAL SEAL 24494 ENGINEER GREGORY J. WELLS

IN CHARGE GJW DESIGNED WLE MADE BY WLE CHECKED CAWjr	NO SCALE	RECORD DRAWING TO THE BEST OF OUR KNOWLEDGE AND BELIEF THIS RECORD DRAWING SUBSTANTIALLY REPRESENTS THE PROJECT AS CONSTRUCTED	willis ENGINEERS	WATER AND SEWER AUTHORITY OF CABARRUS COUNTY WASTEWATER FACILITIES	MT. PLEASANT PUMPING STATION NO. 2 ELECTRICAL	1968.010 14rec.DWG JUNE 2018	14

WILLIS ENGINEERS, 10700 SIKES PLACE, CHARLOTTE, NORTH CAROLINA, 28277 - NC LIC. NO. F-0114

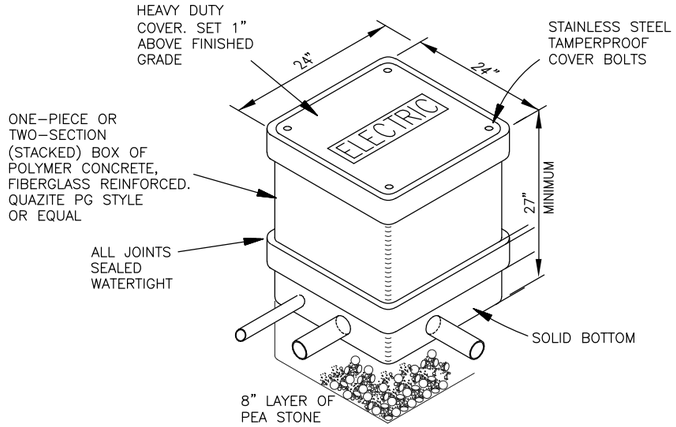

IN-GROUND PULL BOX

KVA LOAD	LOAD SERVED	WIRE SIZE	BRKR AMPS	CKT NO.	CKT NO.	BRKR AMPS	WIRE SIZE	LOAD SERVED	KVA LOAD
	SPARE (WELL HOUSING)		20	1	2	20	12	MCC LIGHT & RECEPT (G)	.8
	SPARE (WELL PUMP)		20	3	4	20	12	MCC HEATERS (G)	1.2
.4	GENSET RECEPT	12	20	5	6	20	12	LIGHTING	.4
.4	BATTERY CHARGER	12	20	7	8	20		SPARE	
2.5	ENGINE HEATER	8	30	9	10	20	12	PUMP CONTROL PANEL	.6
2.5				11	12	20	12	FLOWMETER	.2
	SPARE (ODOR CONTROL)		20	13	14	20	10	RECEPTACLE WET WELL	.6
.4	RECEPT - WET WELL	10	20	15	16	20	10	MIXER CONTROL POWER	.6
	SPACE ONLY			17	18	20	10	JUNCTION WET WELL	
	SPACE ONLY			19	20			SPACE ONLY	
	SPACE ONLY			21	22			SPACE ONLY	
	SPACE ONLY			23	24			SPACE ONLY	
								SPACE ONLY	
	MAIN BREAKER		60					SPACE ONLY	
								SPACE ONLY	

SQUARE D TYPE NQOD
LOCATED IN MCC
120/208V 3 PHASE 4 WIRE
10,000 AIC FULLY RATED

NEUTRAL BUS | GROUND BAR

(G) = GFCI CIRCUIT BREAKER

PANEL A

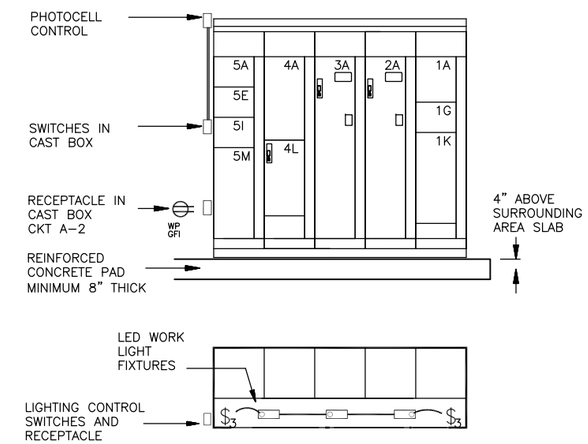

MOTOR CONTROL CENTER MCC

MOTOR CONTROL CENTER SHALL BE SQUARE D MODEL 6 OR APPROVED EQUAL, FOR 480V 3 PHASE 3 WIRE OPERATION. BUSSES SHALL BE OF TIN-PLATED COPPER, RATED NOT LESS THAN 300A (VERTICAL) AND 600A (HORIZONTAL), BRACED FOR FAULT CURRENT OF 65,000A RMS SYM. WIRING SHALL BE NEMA CLASS 1, TYPE B. ALL UNITS SHALL BE RATED MINIMUM 65,000 AIC. COORDINATE WITH SUPPLIERS OF PROCESS EQUIPMENT AND WITH SYSTEMS INTEGRATOR FOR CONTROL INTERFACES.
ENCLOSURE SHALL BE FREE-STANDING NEMA 3R NON-WALK-IN TYPE.

UNIT	LOAD SERVED	DEVICE DESCRIPTION
1A	SPACE	EQUIPPED SPACE
1G	METERING	DIGITAL METERING SYSTEM. LCD DISPLAY. WAVEFORM CAPTURE AND HIGH-SPEED TRANSIENT DETECTION. SQUARE D CM4000T OR EQUAL.
1K	MAIN BREAKER	600A 3P 480V CIRCUIT BREAKER. 65 KAIC. ELECTRONIC TRIP. SQUARE D LI FRAME OR EQUAL.
2A	PUMP 1 - 150HP	COMBINATION SOFT-START CONTROLLER AND THERMAL-MAGNETIC CIRCUIT BREAKER DISCONNECT. CONTROLLER RATED FOR SEVERE DUTY APPLICATION. MINIMUM 150A @ 480V. BYPASS ISOLATION CONTACTOR AND NEMA RATED BYPASS CONTACTOR WITH FULL-VOLTAGE STARTING CAPABILITY. EQUIP CIRCUIT BREAKER WITH SHUNT TRIP, TO DISCONNECT POWER UPON STARTER FAULT.
3A	PUMP 2 - 150HP	COMBINATION SOFT-START CONTROLLER AND THERMAL-MAGNETIC CIRCUIT BREAKER DISCONNECT. SAME AS ABOVE.
4A	PANEL A	120/208V 3-PHASE 4-WIRE BRANCH CIRCUIT PANELBOARD. SEE SCHEDULE.
4L	TRANSFORMER	15 KVA DRY-TYPE TRANSFORMER, WITH PRIMARY CIRCUIT BREAKER. 480V TO 120/208V 3-PHASE. TO SERVE PANEL A.
5A	EQ BASIN MIXER 10HP	30A 3P CIRCUIT BREAKER IN COMPACT UNIT.
5C	SPARE	60A 3P CIRCUIT BREAKER IN COMPACT UNIT.
5E	SPACE	EQUIPPED SPACE
5M	EQUIPMENT COMPARTMENT	36"H x 9"D COMPARTMENT FOR POWER SUPPLY EQUIPMENT TO BE INSTALLED BY SYSTEMS INTEGRATOR

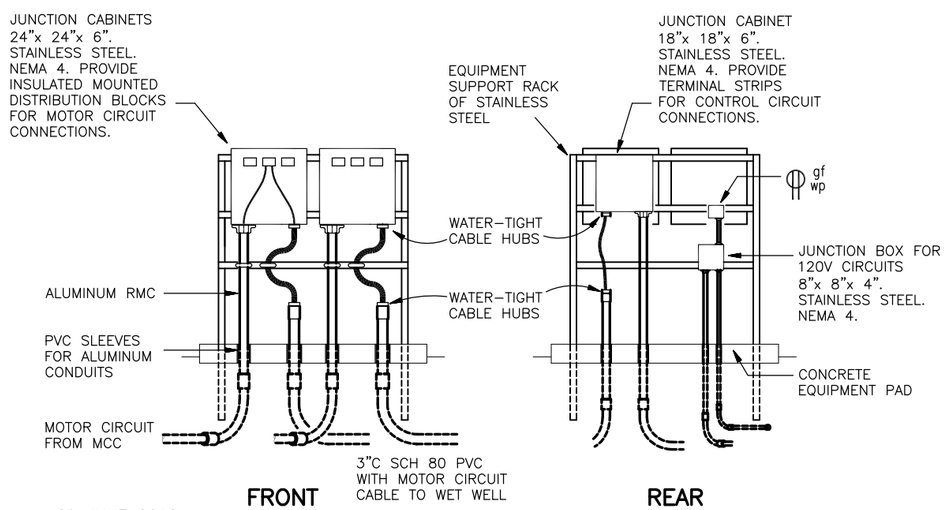

EQUIPMENT RACK AT WET WELL

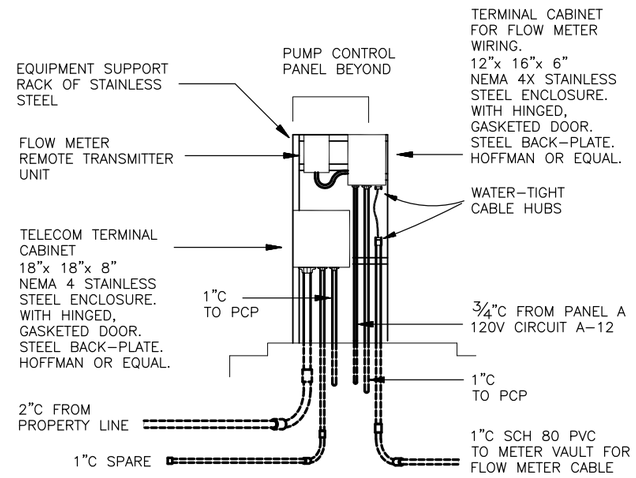

EQUIPMENT RACK AT PUMP CONTROL PANEL

29 JUNE 2018

NORTH CAROLINA PROFESSIONAL SEAL 24494 ENGINEER GREGORY J. WELLS

IN CHARGE GJW DESIGNED WLE MADE BY WLE CHECKED CAWjr	NO SCALE	RECORD DRAWING TO THE BEST OF OUR KNOWLEDGE AND BELIEF THIS RECORD DRAWING SUBSTANTIALLY REPRESENTS THE PROJECT AS CONSTRUCTED	willis ENGINEERS	WATER AND SEWER AUTHORITY OF CABARRUS COUNTY WASTEWATER FACILITIES	MT. PLEASANT PUMPING STATION NO. 2 ELECTRICAL	1968.010 15rec.DWG JUNE 2018	15

WILLIS ENGINEERS, 10700 SIKES PLACE, CHARLOTTE, NORTH CAROLINA, 28277 - NC LIC. NO. F-0114

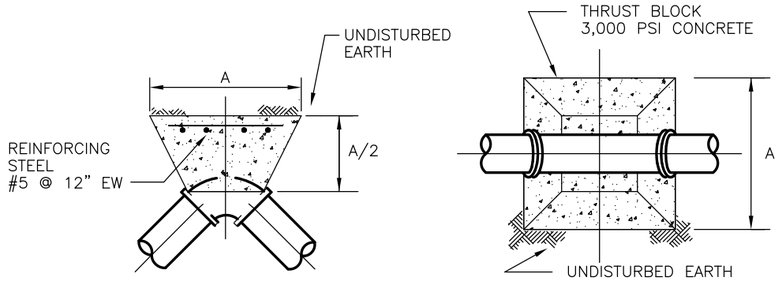

PLAN

ELEVATION

DIMENSION "A"

FITTING	8" PIPE
45° BEND	2'–6"
90° BEND	3'–4"

NOTES:

1. ALL FACES OF THE BLOCK SHALL REST AGAINST UNDISTURBED SOIL.
2. PIPE JOINTS ARE NOT TO BE ENCASED IN CONCRETE.
3. THRUST BLOCKS REQUIRED AT ALL BENDS & TEES.
4. DIMENSIONS BASED ON 150 PSI TEST PRESSURE 1,000 PSF BEARING CAPACITY. LARGER SIZES MAY BE REQUIRED AT THE DIRECTION OF THE ENGINEER.

THRUST BLOCK

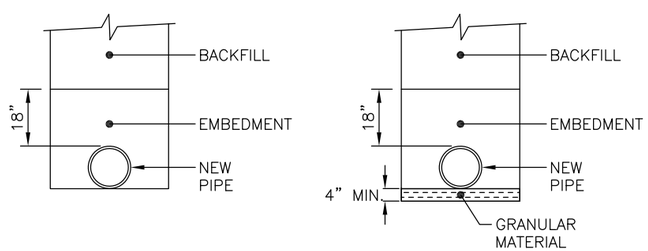

TYPE "A" BEDDING

TYPE "B" BEDDING

NOTES:

1. TRENCH DEPTHS MEASURED FROM FINISHED GRADE TO PIPE INVERT.
2. PIPE EMBEDMENT SHALL BE PLACED IN A MINIMUM OF 6" LAYERS AND COMPACTED TO 95% OF THE MAXIMUM LABORATORY DRY DENSITY AS DETERMINED BY THE STANDARD PROCTOR METHOD.

LIMITING TRENCH DEPTH

PIPE MATERIAL	TYPE "A" BEDDING	TYPE "B" BEDDING
DIP	4'–10'	10'–30'

BEDDING DETAILS

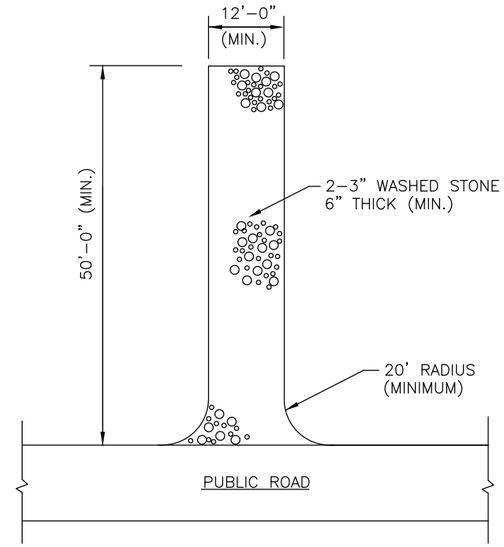

NOTE:

1. INSPECT TEMPORARY CONSTRUCTION ENTRANCE PERIODICALLY FOR CONDITION OF SURFACE. TOP DRESS WITH NEW WASHED STONE AS NEEDED.

TEMPORARY GRAVEL CONSTRUCTION ENTRANCE

CONFORMS TO EROSION AND SEDIMENT CONTROL PLANNING DESIGN MANUAL DETAIL 6.06

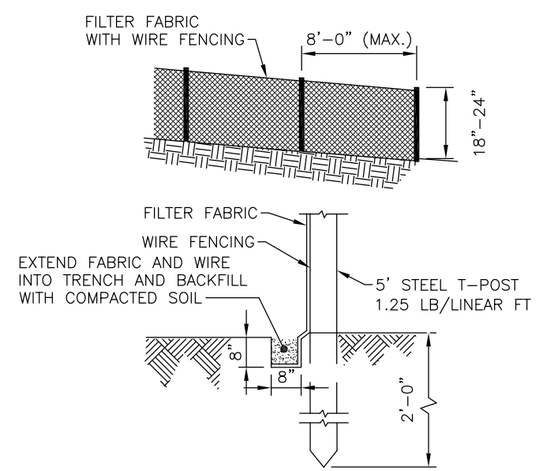

SILT CHECK FENCE

CONFORMS TO EROSION AND SEDIMENT CONTROL PLANNING DESIGN MANUAL DETAIL 6.62

EROSION CONTROL NOTES:

1. THE CONTRACTOR SHALL TAKE WHATEVER MEASURES NECESSARY TO MINIMIZE SOIL EROSION AND SILTATION. HE SHALL KEEP FULLY INFORMED OF ALL SUCH REGULATIONS WHICH AFFECT THE CONDUCT OF THE WORK, AND SHALL AT ALL TIMES OBSERVE AND COMPLY WITH ALL SUCH REGULATIONS.
2. PERMANENT GROUND COVER SHALL BE ESTABLISHED ON ALL PERIMETER DIKES, SWALES, DITCHES, PERIMETER SLOPES, AND ALL SLOPES GREATER THAN 3:1 WITHIN SEVEN (7) WORKING DAYS OF THE LAST LAND DISTURBING ACTIVITY. ALL OTHER DISTURBED AREAS SHALL BE PROVIDED WITH PERMANENT GROUND COVER WITHIN FOURTEEN (14) CALENDAR DAYS. GROUND COVER WILL CONSIST OF SEEDING, MULCHING AND FERTILIZING AS SPECIFIED. THE CONTRACTOR WILL BE REQUIRED TO FOLLOW THE LAND DISTURBING ACTIVITIES (AS CLOSELY AS PRACTICAL) WITH RESTORATION, FERTILIZING, SEEDING, AND MULCHING.
3. ALL EROSION AND SEDIMENT CONTROL DEVICES SHALL BE INSPECTED WEEKLY AND FOLLOWING EVERY RAIN EVENT. ANY NEEDED REPAIRS SHALL BE MADE IMMEDIATELY. THE CONTRACTOR, UPON COMPLETION OF THIS PROJECT, SHALL LEAVE INTACT THOSE TEMPORARY EROSION CONTROL DEVICES DEEMED NECESSARY BY THE ENGINEER FOR FUTURE PROTECTION.
4. SEDIMENT FENCES (SILT CHECK FENCE) SHALL BE CONSTRUCTED WHERE SHOWN ON THE PLANS. CONSTRUCTION SHALL CONFORM TO EROSION CONTROL DETAIL 6.62. INSPECT SILT FENCES WEEKLY AND AFTER EACH RAINFALL. REMOVE SEDIMENT AS NEEDED TO MAINTAIN ADEQUATE STORAGE. IF SILT FENCE BECOMES DAMAGED OR COLLAPSES, REPLACE IMMEDIATELY. SILT FENCE SHALL BE REMOVED AFTER DRAINAGE AREA HAS BEEN STABILIZED.
5. ALL DISTURBED AREAS SHALL BE SEEDED WITH PERMANENT SEED FOR PRIMARY STABILIZATION AND TEMPORARY SEED FOR IMMEDIATE GROUND STABILIZATION. PERMANENT SEED SHALL BE KENTUCKY 31 FESCUE APPLIED AT A RATE OF 100LBS/ACRE. IF SEEDING WILL OCCUR BETWEEN AUGUST 15 AND APRIL 15, TEMPORARY SEED SHALL BE RYE GRAIN APPLIED AT A RATE OF 40 LBS PER ACRE. IF SEEDING WILL OCCUR BETWEEN APRIL 15 AND AUGUST 15, TEMPORARY SEED SHALL BE GERMAN MILLET APPLIED AT A RATE OF 10 LBS PER ACRE.
6. LIME AND FERTILIZER SHALL BE APPLIED WITH ALL SEEDING ACTIVITIES. A 5–10–10 GRADE OF FERTILIZER SHALL BE SPREAD AT A RATE OF 40LBS/1000SF. LIME SHALL BE APPLIED AT A RATE OF 2,000 LBS/1000 SF.
7. MULCH SHALL BE SPREAD UNIFORMLY AT A RATE OF 4,000 LBS/ACRE IN A CONTINUOUS BLANKET OVER THE AREAS SPECIFIED. THICKNESS OF THE COVERING SHALL BE ADEQUATE TO HOLD THE SOIL BUT SUFFICIENTLY LOOSE AND OPEN TO FAVOR THE DEVELOPMENT OF GRASS.
8. CONTRACTOR SHALL MAINTAIN A RAIN GAUGE AT THE PROJECT SITE AND PROVIDE WEEKLY AND POST RAINFALL INSPECTION REPORTS IN ACCORDANCE WITH NPDES REQUIREMENTS.

EROSION CONTROL CONSTRUCTION SEQUENCE:

1. INSTALL EROSION CONTROL MEASURES IN ADVANCE OF LAND DISTURBING ACTIVITIES.
2. CONSTRUCT FACILITIES.
3. MAINTENANCE OF EROSION CONTROL DEVICES IS THE CONTRACTOR'S RESPONSIBILITY. EROSION CONTROL MEASURES SHALL BE INSPECTED WEEKLY AND AFTER EACH RAIN EVENT. THE DEVICES SHALL BE INSPECTED FOR DAMAGE AND REPAIRS SHALL BE COMPLETED IMMEDIATELY.
4. RESEED, MULCH, AND STABILIZE DISTURBED AREAS AS SOON AS PRACTICAL FOLLOWING WATER MAIN INSTALLATION.
5. MAINTAIN ALL EROSION CONTROL MEASURES. AFTER PROJECT AREA IS STABILIZED, REMOVE EROSION CONTROL DEVICES.

29 JUNE 2018

NORTH CAROLINA PROFESSIONAL SEAL 24494 ENGINEER GREGORY J. WELLS

WILLIS ENGINEERS, 10700 SIKES PLACE, CHARLOTTE, NORTH CAROLINA, 28277 – NC LIC. NO. F–0114

IN CHARGE GJW DESIGNED SEG MADE BY AMA CHECKED CAWjr	2' 0 2' 4'	RECORD DRAWING TO THE BEST OF OUR KNOWLEDGE AND BELIEF THIS RECORD DRAWING SUBSTANTIALLY REPRESENTS THE PROJECT AS CONSTRUCTED	willis ENGINEERS	WATER AND SEWER AUTHORITY OF CABARRUS COUNTY WASTEWATER FACILITIES	DETAILS	1968.010 16rec.DWG JUNE 2018	16

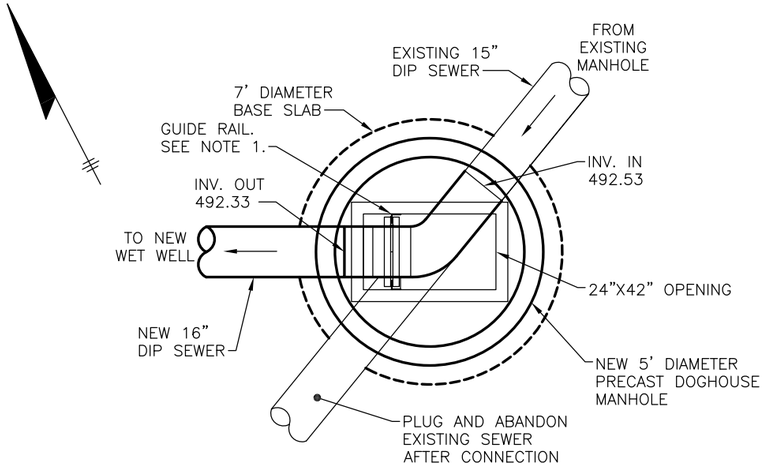

PLAN

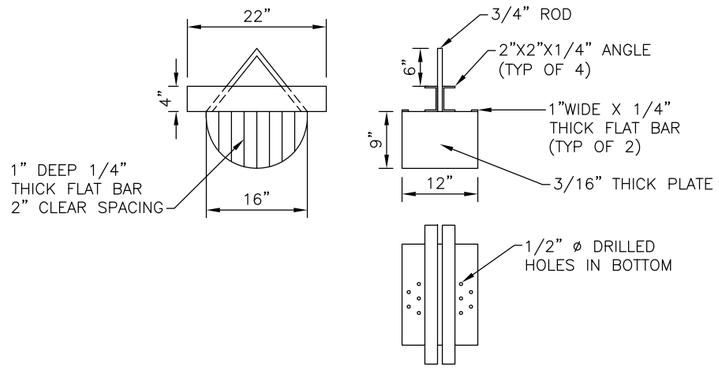

DEBRIS BASKET DETAIL

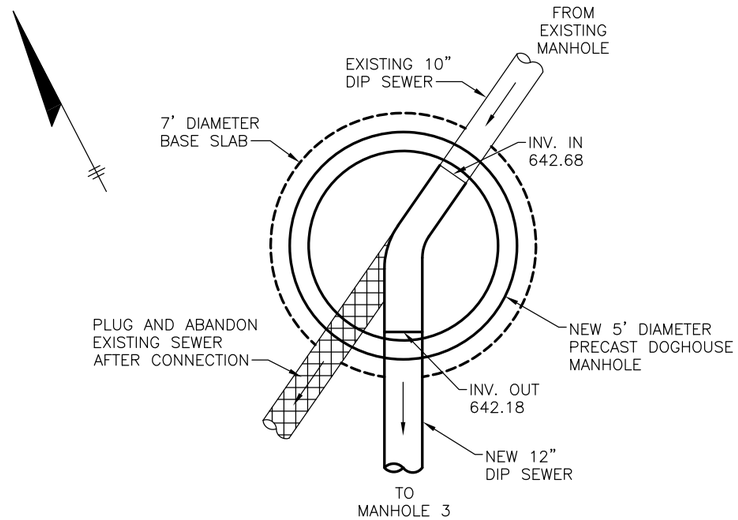

MANHOLE 2 PLAN

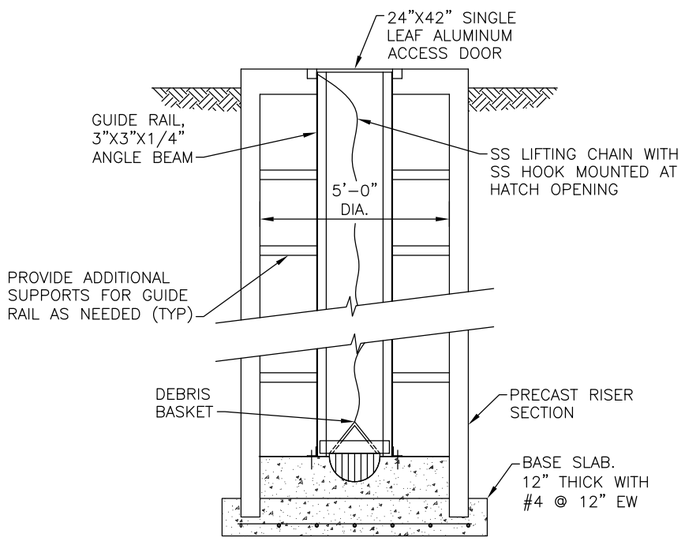

SECTION

MANHOLE 1

MANHOLE 1 NOTES:

1. DEBRIS BASKET GUIDE RAILS MUST BE POSITIONED TO AVOID CONFLICT WITH ALUMINUM ACCESS DOOR HINGES.
2. ALL COMPONENTS OF THE DEBRIS BASKET AND GUIDE RAIL SYSTEM SHALL BE ALUMINUM WITH STAINLESS STEEL ANCHOR BOLTS.
3. CONTRACTOR SHALL SUBMIT DETAILED SHOP DRAWINGS OF DEBRIS BASKET AND GUIDERAIL SYSTEM FOR APPROVAL PRIOR TO FABRICATION. SYSTEM SHALL INCLUDE BUT NOT LIMITED TO THE DEBRIS BASKET, GUIDERAILS, RAIL SUPPORTS AND ANCHOR BOLTS.

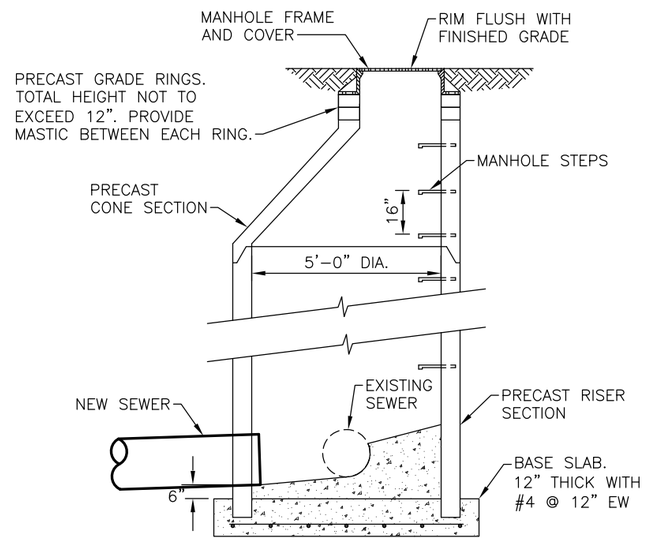

DOGHOUSE MANHOLE CONSTRUCTION SEQUENCE:

1. VERIFY ELEVATION OF EXISTING SEWER PRIOR TO CONSTRUCTION.
2. POUR CONCRETE BASE SLAB AND INVERT.
3. CONSTRUCT PRECAST MANHOLE.
4. UPON APPROVAL OF OWNER AND ENGINEER, SAW CUT EXISTING SEWER AND GROUT NEW INVERT TO PROVIDE SMOOTH TRANSITION INTO NEW SEWER.

TYPICAL DOGHOUSE MANHOLE

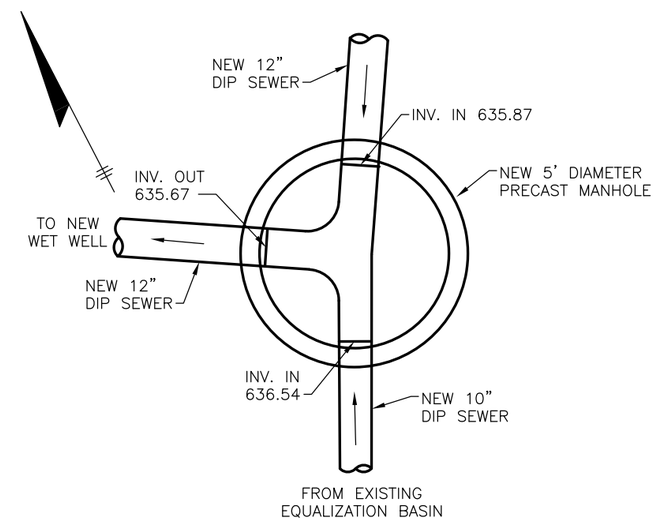

MANHOLE 3 PLAN

29 JUNE 2018

NORTH CAROLINA PROFESSIONAL SEAL 24494 ENGINEER GREGORY J. WELLS

IN CHARGE GJW DESIGNED SEG MADE BY AMA CHECKED CAWjr	2' 0 2' 4'	RECORD DRAWING TO THE BEST OF OUR KNOWLEDGE AND BELIEF THIS RECORD DRAWING SUBSTANTIALLY REPRESENTS THE PROJECT AS CONSTRUCTED	willis ENGINEERS	WATER AND SEWER AUTHORITY OF CABARRUS COUNTY WASTEWATER FACILITIES	DETAILS	1968.010 17rec.DWG JUNE 2018	17

WILLIS ENGINEERS, 10700 SIKES PLACE, CHARLOTTE, NORTH CAROLINA, 28277 – NC LIC. NO. F-0114

(END OF EXHIBIT B)

Exhibit C
Record Drawings for Mt. Pleasant Northwest Sewer Extension
(Reference Only)

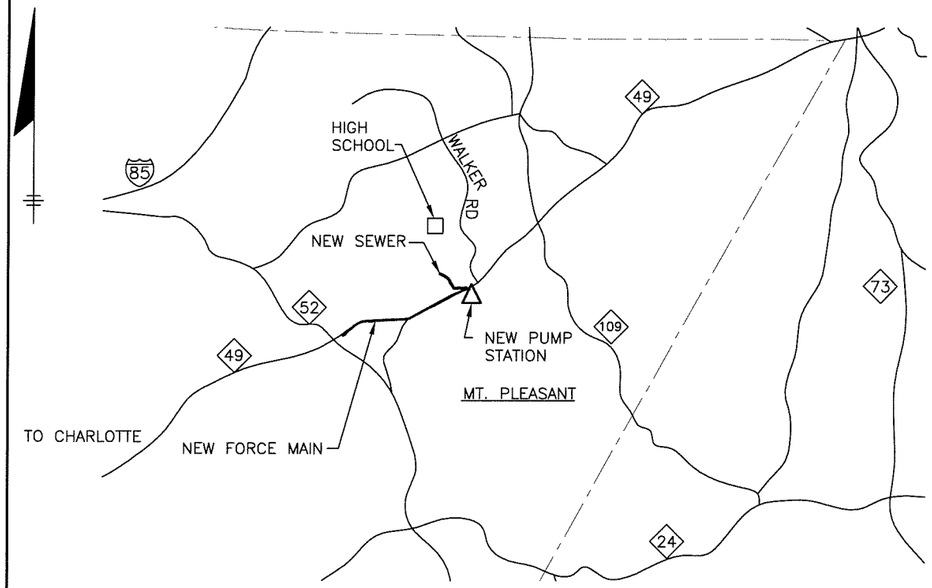

LOCATION MAP

RECORD DRAWINGS

WASTEWATER FACILITIES

CONTRACT 4.0
MT. PLEASANT NORTHWEST SEWER EXTENSION

WATER AND SEWER AUTHORITY OF CABARRUS COUNTY

BOARD OF DIRECTORS

CHAIRMAN	MICHAEL QUICKEL
DIRECTORS	TROY BARNHARDT
	ROBERT W. CARRUTH
	T. MARK FOWLER
	MICHAEL B. LEGG
	DARRELL HINNANT
	DAVID W. PHILLIPS
	ELIZABETH POOLE
	RHONDA POPPEN
EXECUTIVE DIRECTOR	COLEMAN M. KEETER
DIRECTOR OF ENGINEERING	EVANDER H. ROWELL, P.E.

willis ENGINEERS

RECORD DRAWING

NORTH CAROLINA PROFESSIONAL SEAL 24494 ENGINEER GREGORY T. WELLS

02 SEPT 11

1968.005

GENERAL NOTES

1. SIZE AND LOCATION OF UTILITIES SHOWN ON THE PLANS ARE APPROXIMATE. THE CONTRACTOR SHALL VERIFY THE LOCATION OF ALL UTILITIES PRIOR TO CONSTRUCTION AND IS RESPONSIBLE FOR ANY UTILITY DAMAGE.
2. UTILITY POLES AND GUY WIRES HAVE BEEN SHOWN WHERE POTENTIAL CONFLICT EXIST. CONTRACTOR SHALL BE RESPONSIBLE FOR CONFIRMING LOCATION AND COORDINATION WITH LOCAL UTILITY FOR PROTECTION DURING CONSTRUCTION.
3. ALL WORK ALONG NCDOT ROADWAYS SHALL BE DONE IN ACCORDANCE WITH NCDOT POLICY AND PROCEDURE. A TRAFFIC CONTROL PLAN FOR THE PROJECT SHALL BE SUBMITTED AND APPROVED PRIOR TO CONSTRUCTION.
4. PROPERTY LINES AND RIGHTS-OF-WAY AS SHOWN ARE APPROXIMATE. ALL WORK SHALL BE COMPLETED WITHIN THE RIGHT-OF-WAY OR CONSTRUCTION EASEMENTS. STAGGING AREAS REQUIRED OUTSIDE RIGHT-OF-WAY OR EASEMENT SHALL BE THE RESPONSIBILITY OF CONTRACTOR.
5. BENCHMARKS AND HORIZONTAL CONTROL FOR THE PROJECT WILL BE PROVIDED PRIOR TO CONSTRUCTION.
6. DRIVEWAY MATERIALS NOT DEFINED ON PLANS. ALL DISTURBED DRIVEWAYS SHALL BE RESTORED WITH LIKE MATERIALS. CONCRETE DRIVEWAYS SHALL BE REMOVED TO THE NEAREST JOINT. ASPHALT DRIVEWAYS SHALL BE SAW CUT.
7. PROVIDE EXCELSIOR MATTING INSTALLED IN ACCORDANCE WITH THE MANUFACTURER'S RECOMMENDATIONS IN ALL DISTURBED DITCHES AND FILL SLOPES.
8. FOR SEWER CONSTRUCTION, A 15 FOOT UNDISTURBED BUFFER BETWEEN THE EDGE OF THE CLEARING LIMITS AND ADAMS CREEK SHALL BE PROVIDED ALONG THE ENTIRE LENGTH OF THE NEW SEWER, UNLESS OTHERWISE NOTED.
9. EXISTING ROAD SIGNS ALONG NC 49 SHALL BE MAINTAINED DURING CONSTRUCTION. IF NECESSARY, SIGNS MAY BE TEMPORARILY RELOCATED UPON APPROVAL AND COORDINATION WITH NCDOT.
10. AIR RELEASE MANHOLES ARE REQUIRED AT ALL HIGH POINTS ALONG THE FORCE MAIN.
11. FORCE MAIN SHALL HAVE A MINIMUM OF 4 FEET OF COVER, UNLESS OTHERWISE NOTED.

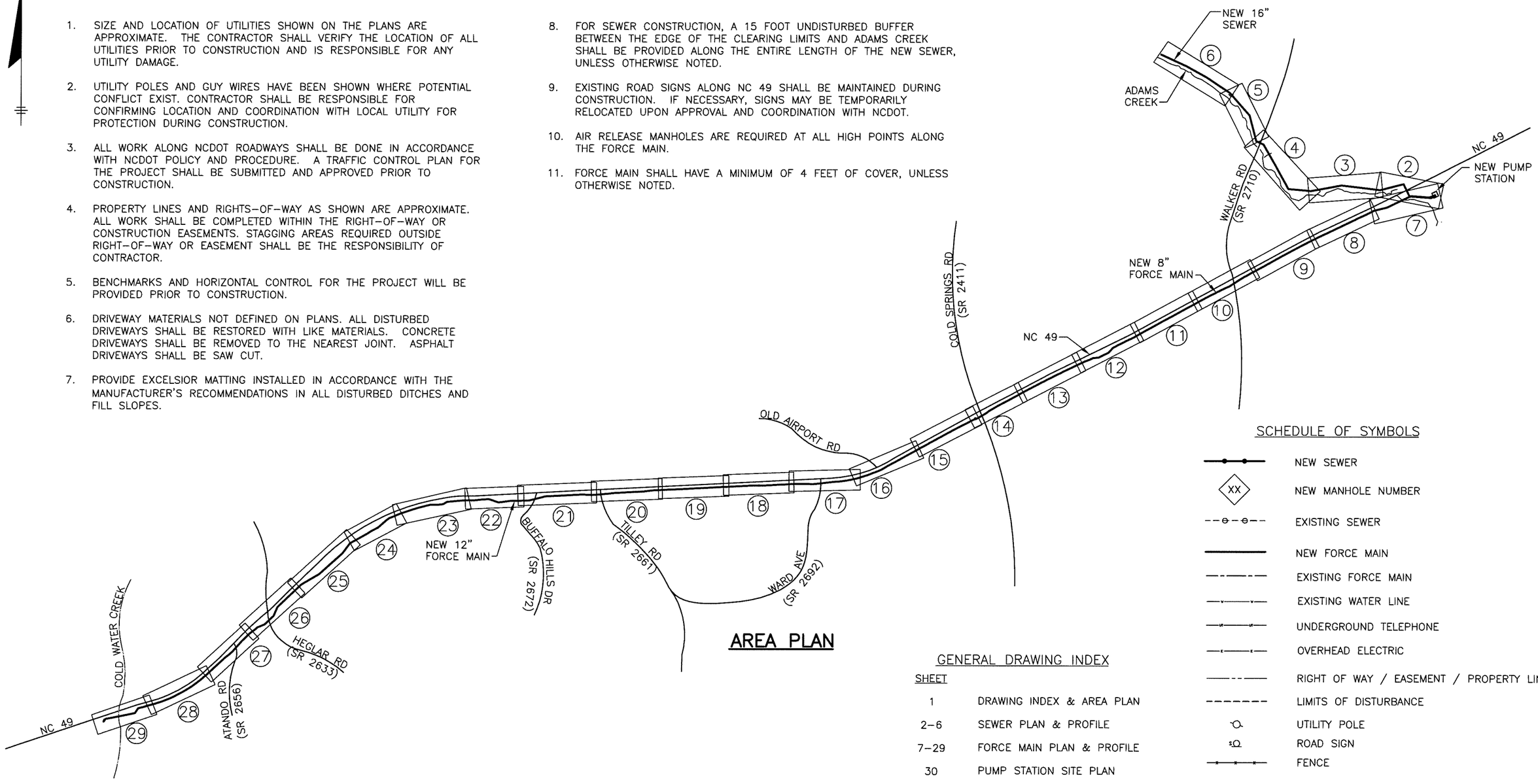

AREA PLAN

SCHEDULE OF SYMBOLS

	NEW SEWER
XX	NEW MANHOLE NUMBER
	EXISTING SEWER
	NEW FORCE MAIN
	EXISTING FORCE MAIN
	EXISTING WATER LINE
	UNDERGROUND TELEPHONE
	OVERHEAD ELECTRIC
	RIGHT OF WAY / EASEMENT / PROPERTY LINE
	LIMITS OF DISTURBANCE
	UTILITY POLE
	ROAD SIGN
	FENCE
XX	SILT CHECK FENCE
	APPROXIMATE LOCATION OF SOIL BORING
XX	EASEMENT NO. AND PROPERTY OWNER INFORMATION
	SILT CHECK DAM
	STONE OUTLET

GENERAL DRAWING INDEX

SHEET	
1	DRAWING INDEX & AREA PLAN
2-6	SEWER PLAN & PROFILE
7-29	FORCE MAIN PLAN & PROFILE
30	PUMP STATION SITE PLAN
31	PUMP STATION PLANS
32	PUMP STATION DETAILS
33-34	PUMP STATION ELECTRICAL
35-36	EROSION CONTROL DETAILS
37-40	GENERAL DETAILS
41	INTERCONNECTION

NORTH CAROLINA PROFESSIONAL SEAL 24494 ENGINEER GREGORY J. WELLS

02 SEPT 11

IN CHARGE CAWjr DESIGNED CAWjr MADE BY AMA CHECKED GJW	750' 0 750' 1500'	RECORD DRAWING TO THE BEST OF OUR KNOWLEDGE AND BELIEF THIS RECORD DRAWING SUBSTANTIALLY REPRESENTS THE PROJECT AS CONSTRUCTED	willis ENGINEERS	WATER AND SEWER AUTHORITY OF CABARRUS COUNTY WASTEWATER FACILITIES	MT. PLEASANT NORTHWEST SEWER EXTENSION DRAWING INDEX & AREA PLAN	1968.005 01REC.DWG SEPTEMBER 2011	1

WILLIS ENGINEERS, 10700 SIKES PLACE, CHARLOTTE, NORTH CAROLINA, 28277 - NC LIC. NO. F-0114

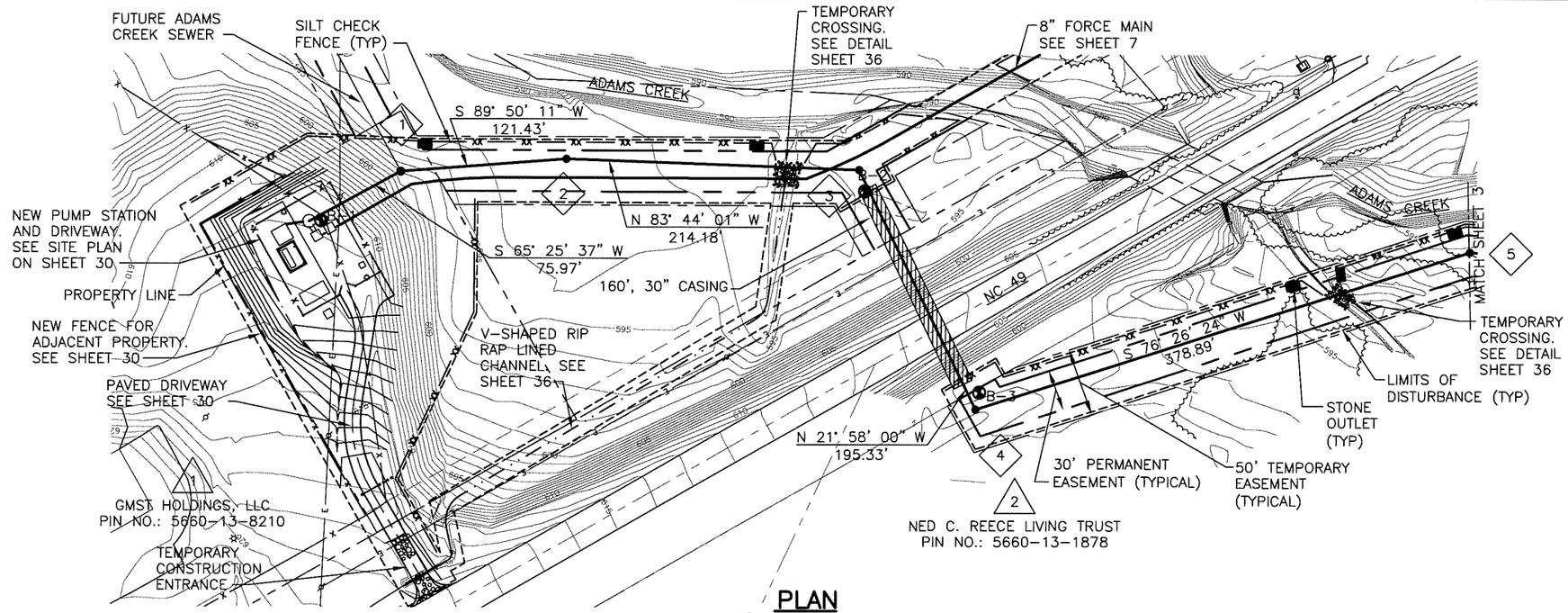

PLAN

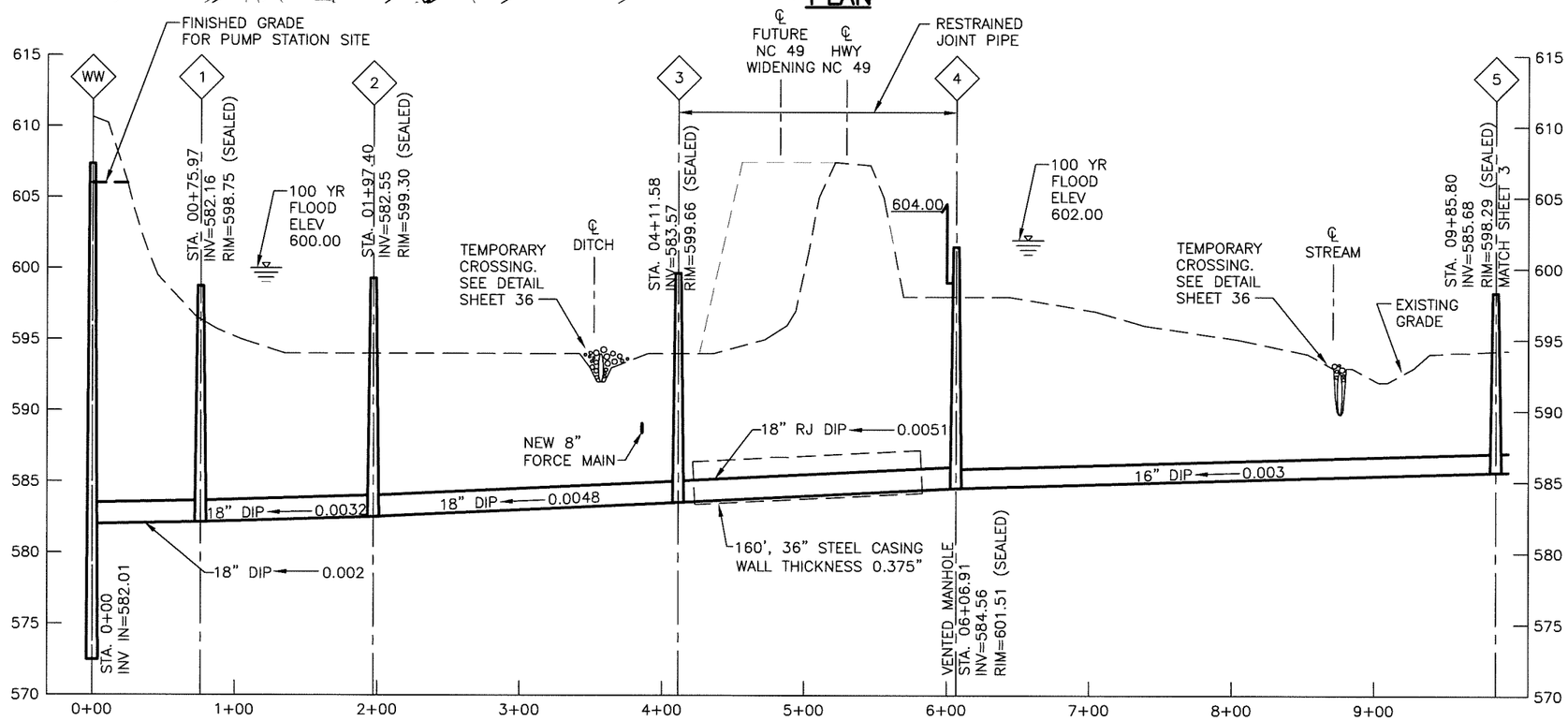

PROFILE

NORTH CAROLINA PROFESSIONAL SEAL 24494 ENGINEER GREGORY J. WILLIS

02 SEPT 11

IN CHARGE CAWjr DESIGNED CAWjr MADE BY AMA CHECKED GJW	V 5' 0 5' 10' H 50' 0 50' 100'	RECORD DRAWING TO THE BEST OF OUR KNOWLEDGE AND BELIEF THIS RECORD DRAWING SUBSTANTIALLY REPRESENTS THE PROJECT AS CONSTRUCTED	willis ENGINEERS	WATER AND SEWER AUTHORITY OF CABARRUS COUNTY WASTEWATER FACILITIES	MT. PLEASANT NORTHWEST SEWER EXTENSION SEWER PLAN AND PROFILE	1968.005 02REC.DWG SEPTEMBER 2011	2

WILLIS ENGINEERS, 10700 SIKES PLACE, CHARLOTTE, NORTH CAROLINA, 28277 - NC LIC. NO. F-0114

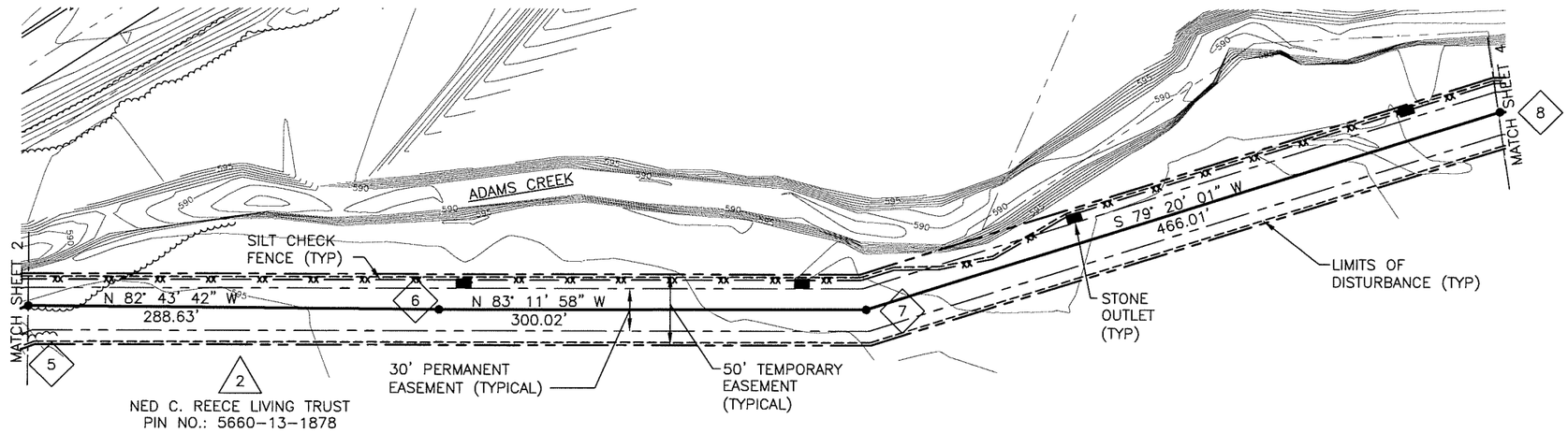

PLAN

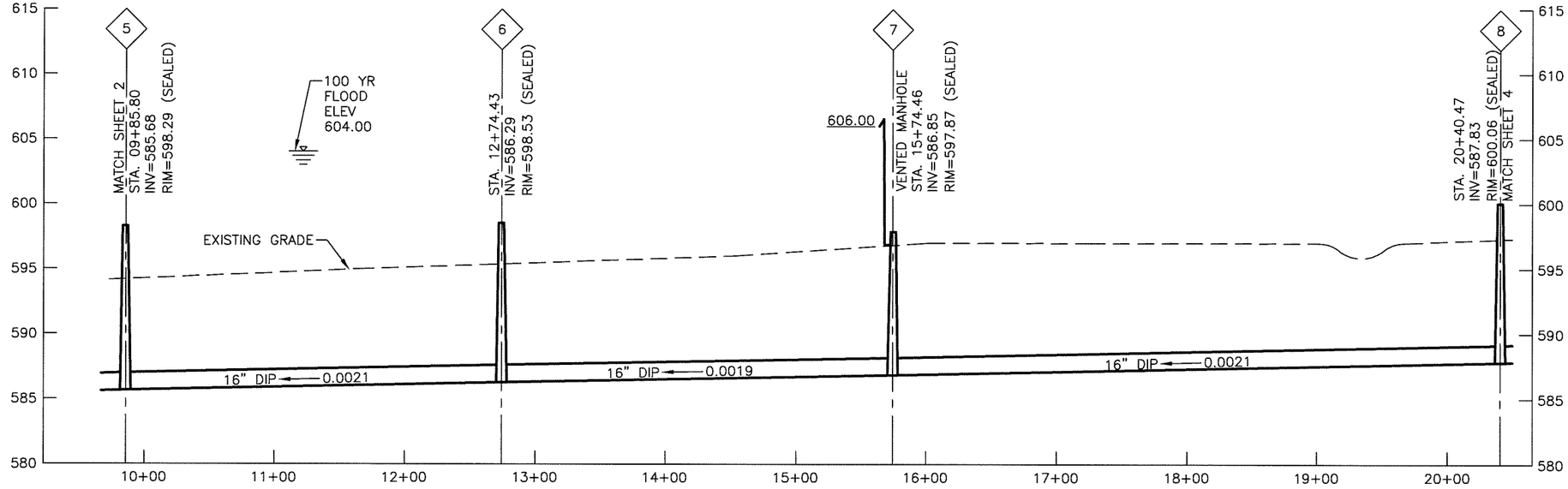

PROFILE

NORTH CAROLINA PROFESSIONAL SEAL 24494 ENGINEER GREGORY J. WELLS

02 SEPT 11

IN CHARGE CAWjr DESIGNED CAWjr MADE BY AMA CHECKED GJW	V 5' 0 5' 10' H 50' 0 50' 100'	RECORD DRAWING TO THE BEST OF OUR KNOWLEDGE AND BELIEF THIS RECORD DRAWING SUBSTANTIALLY REPRESENTS THE PROJECT AS CONSTRUCTED	willis ENGINEERS	WATER AND SEWER AUTHORITY OF CABARRUS COUNTY WASTEWATER FACILITIES	MT. PLEASANT NORTHWEST SEWER EXTENSION SEWER PLAN AND PROFILE	1968.005 03REC.DWG SEPTEMBER 2011	3

WILLIS ENGINEERS, 10700 SIKES PLACE, CHARLOTTE, NORTH CAROLINA, 28277 – NC LIC. NO. F-0114

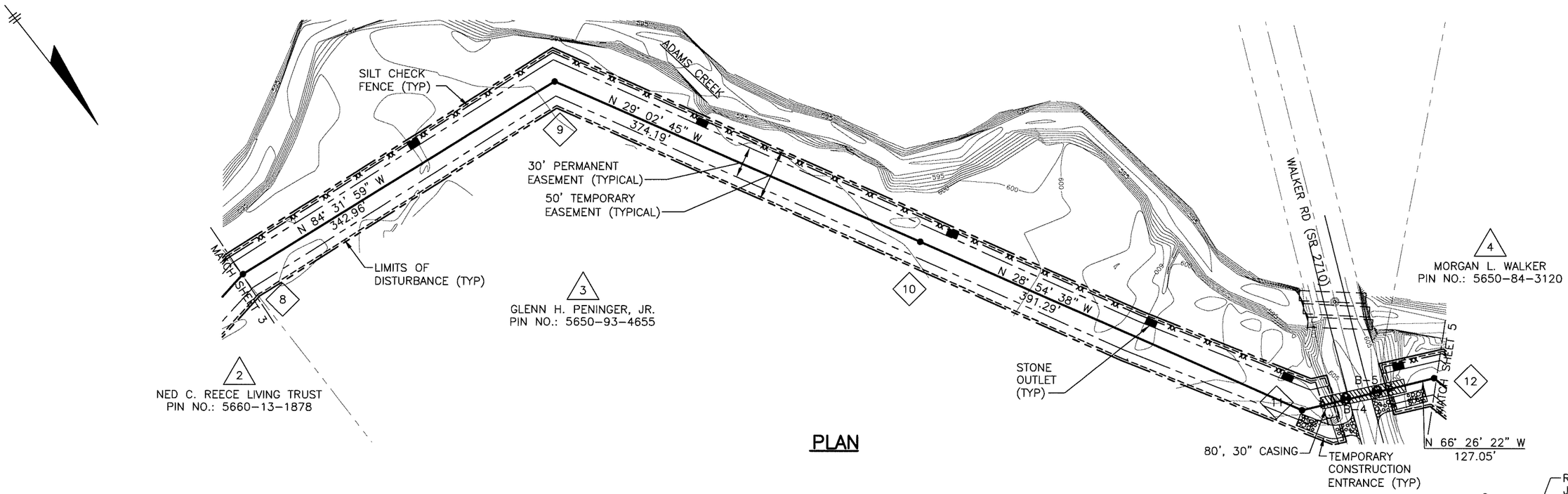

PLAN

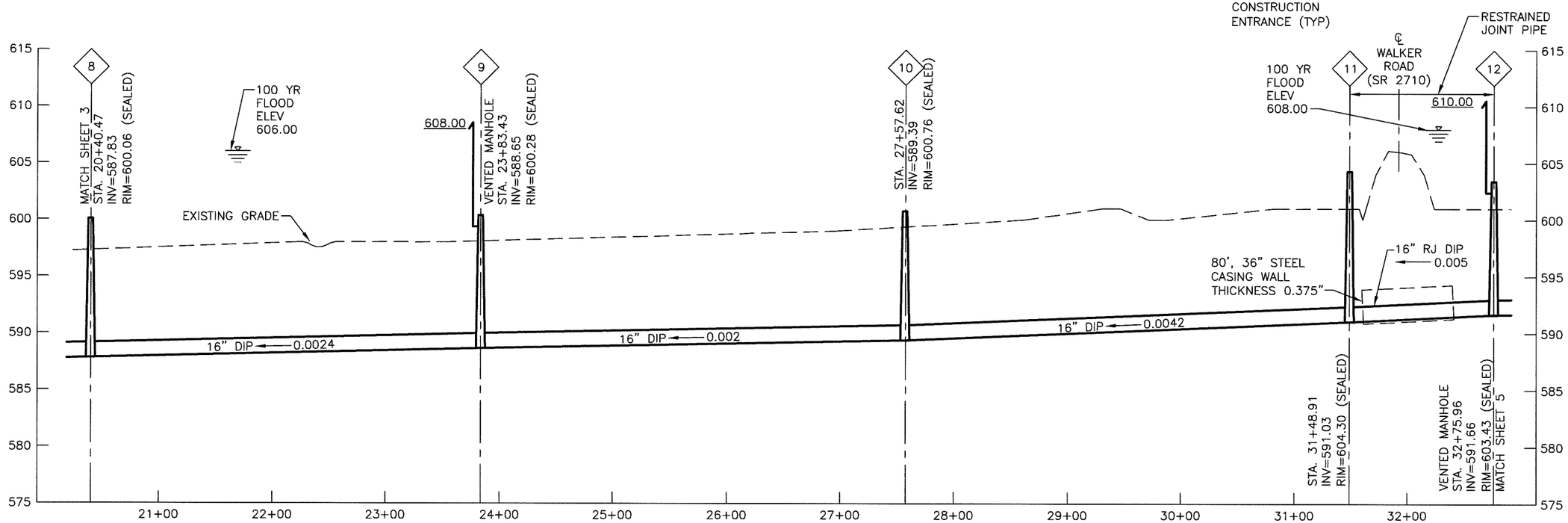

PROFILE

WILLIS ENGINEERS, 10700 SIKES PLACE, CHARLOTTE, NORTH CAROLINA, 28277 – NC LIC. NO. F-0114

NORTH CAROLINA PROFESSIONAL SEAL 24494 ENGINEER GREGORY J. WELLS

02 SEPT 11

IN CHARGE CAWjr DESIGNED CAWjr MADE BY AMA CHECKED GJW	V 5' 0 5' 10' H 50' 0 50' 100'	RECORD DRAWING TO THE BEST OF OUR KNOWLEDGE AND BELIEF THIS RECORD DRAWING SUBSTANTIALLY REPRESENTS THE PROJECT AS CONSTRUCTED	willis ENGINEERS	WATER AND SEWER AUTHORITY OF CABARRUS COUNTY WASTEWATER FACILITIES	MT. PLEASANT NORTHWEST SEWER EXTENSION SEWER PLAN AND PROFILE	1968.005 04REC.DWG SEPTEMBER 2011	4

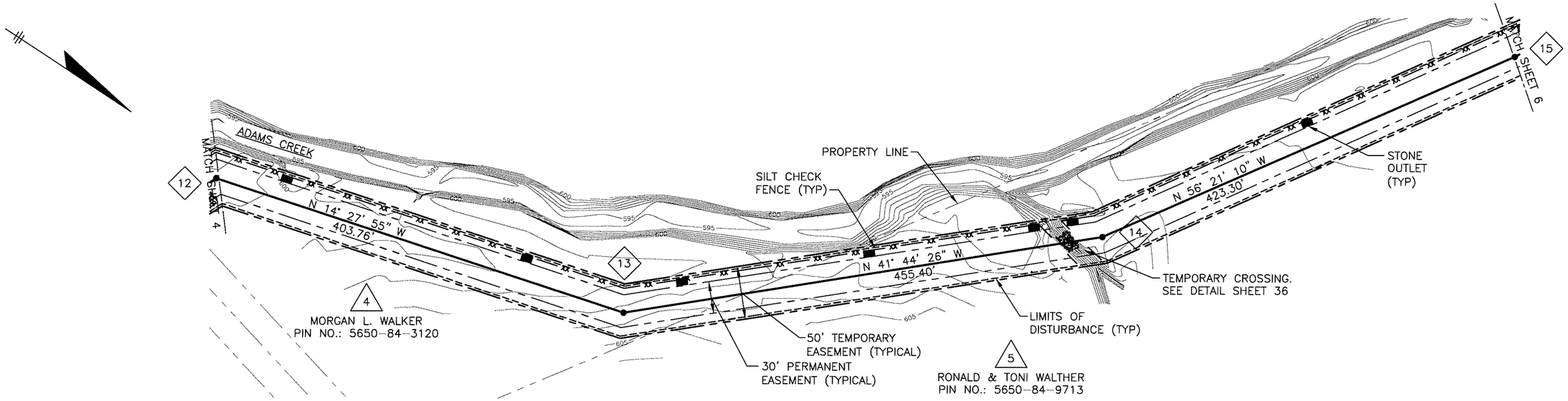

PLAN

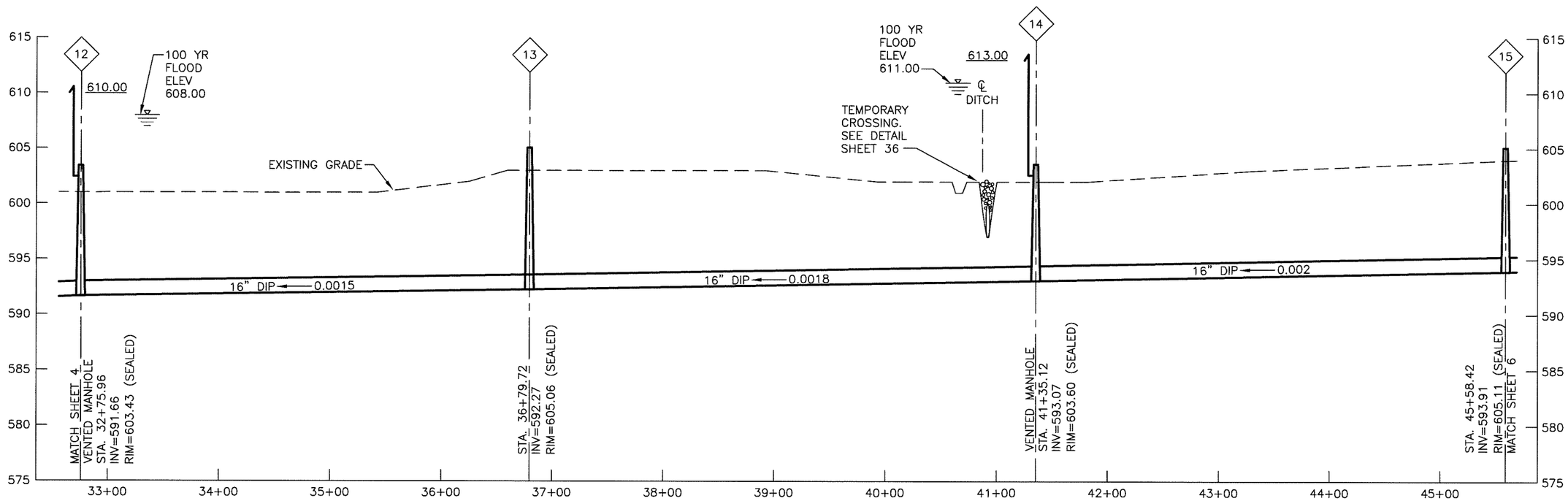

PROFILE

WILLIS ENGINEERS, 10700 SIKES PLACE, CHARLOTTE, NORTH CAROLINA, 28277 - NC LIC. NO. F-0114

NORTH CAROLINA PROFESSIONAL SEAL 24494 ENGINEER GREGORY J. WELLS

02 SEPT 11

IN CHARGE CAWjr DESIGNED CAWjr MADE BY AMA CHECKED GJW	V 5' 0 5' 10' H 50' 0 50' 100'	RECORD DRAWING TO THE BEST OF OUR KNOWLEDGE AND BELIEF THIS RECORD DRAWING SUBSTANTIALLY REPRESENTS THE PROJECT AS CONSTRUCTED	willis ENGINEERS	WATER AND SEWER AUTHORITY OF CABARRUS COUNTY WASTEWATER FACILITIES	MT. PLEASANT NORTHWEST SEWER EXTENSION SEWER PLAN AND PROFILE	1968.005 05REC.DWG SEPTEMBER 2011	5

NOTES:

1. EXISTING 6" PIPE IS WWTP DISCHARGE. CONTRACTOR SHALL PROTECT DURING CONSTRUCTION.
2. CONTRACTOR SHALL PROTECT EXISTING FENCES. IF NECESSARY, PORTIONS OF THE FENCE SHALL BE REMOVED DURING AND THEN RESTORED AFTER CONSTRUCTION. PROVIDE TEMPORARY BARRICADES TO PREVENT ACCESS DURING NON-WORKING HOURS.
3. ACCESS TO THIS LOCATION IS THROUGH MT. PLEASANT HIGH SCHOOL SITE. ROUTE TO BE COORDINATED PRIOR TO CONSTRUCTION. CONTRACTOR SHALL CLEAN AND MAINTAIN DRIVEWAY AT ALL TIMES DURING CONSTRUCTION.
4. ATHLETIC FIELD CONTAINS IRRIGATION SYSTEM IN VICINITY OF SEWER.

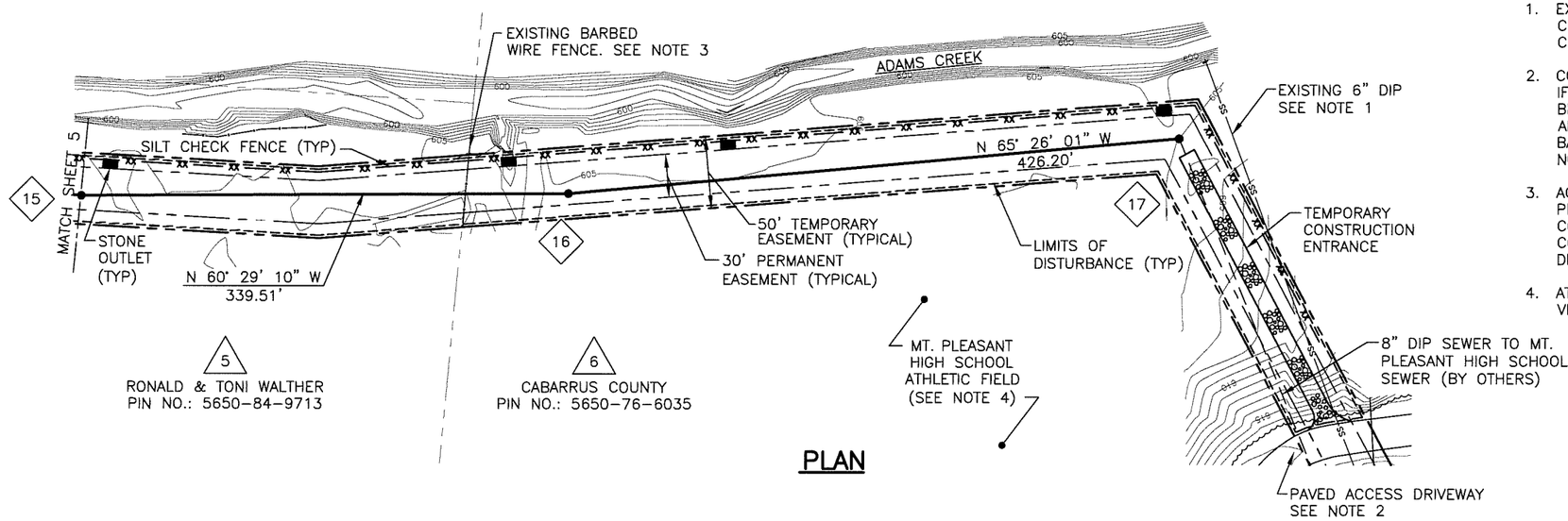

PLAN

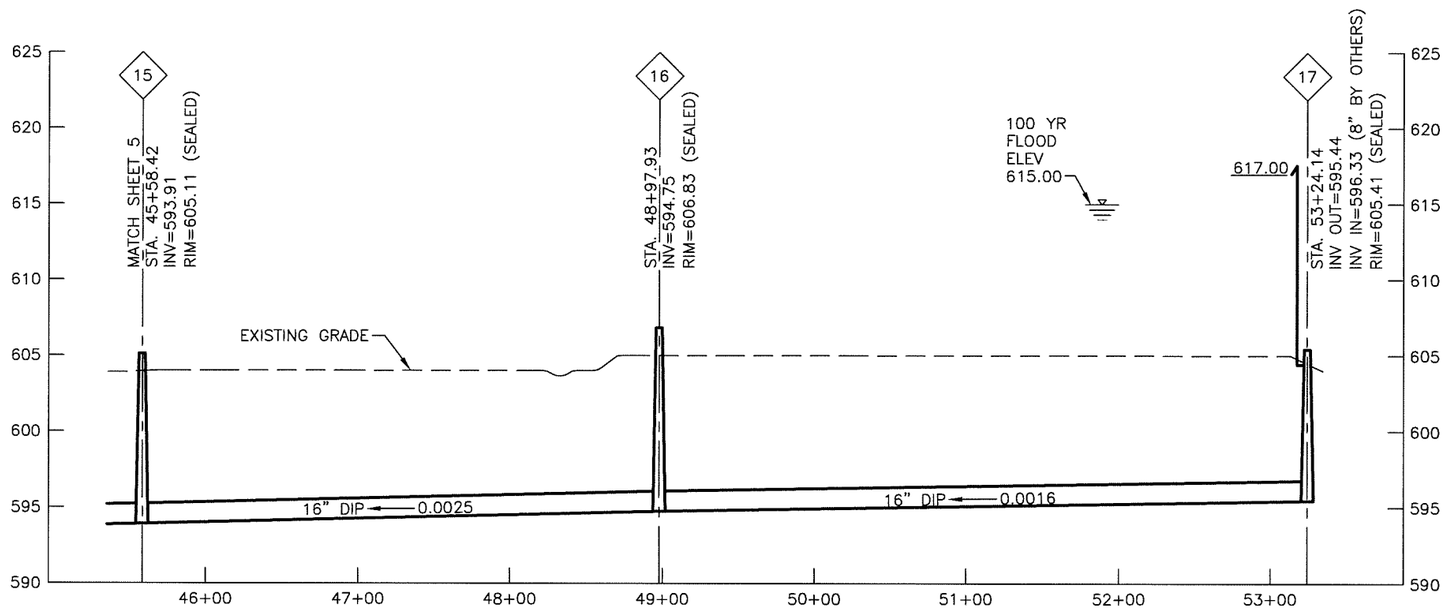

PROFILE

WILLIS ENGINEERS, 10700 SIKES PLACE, CHARLOTTE, NORTH CAROLINA, 28277 - NC LIC. NO. F-0114

NORTH CAROLINA PROFESSIONAL SEAL 24494 ENGINEER GREGORY J. WILLIS

02 SEPT 11

IN CHARGE CAWjr DESIGNED CAWjr MADE BY AMA CHECKED GJW	V 5' 0 5' 10' H 50' 0 50' 100'	RECORD DRAWING TO THE BEST OF OUR KNOWLEDGE AND BELIEF THIS RECORD DRAWING SUBSTANTIALLY REPRESENTS THE PROJECT AS CONSTRUCTED	willis ENGINEERS	WATER AND SEWER AUTHORITY OF CABARRUS COUNTY WASTEWATER FACILITIES	MT. PLEASANT NORTHWEST SEWER EXTENSION SEWER PLAN AND PROFILE	1968.005 06REC.DWG SEPTEMBER 2011	6

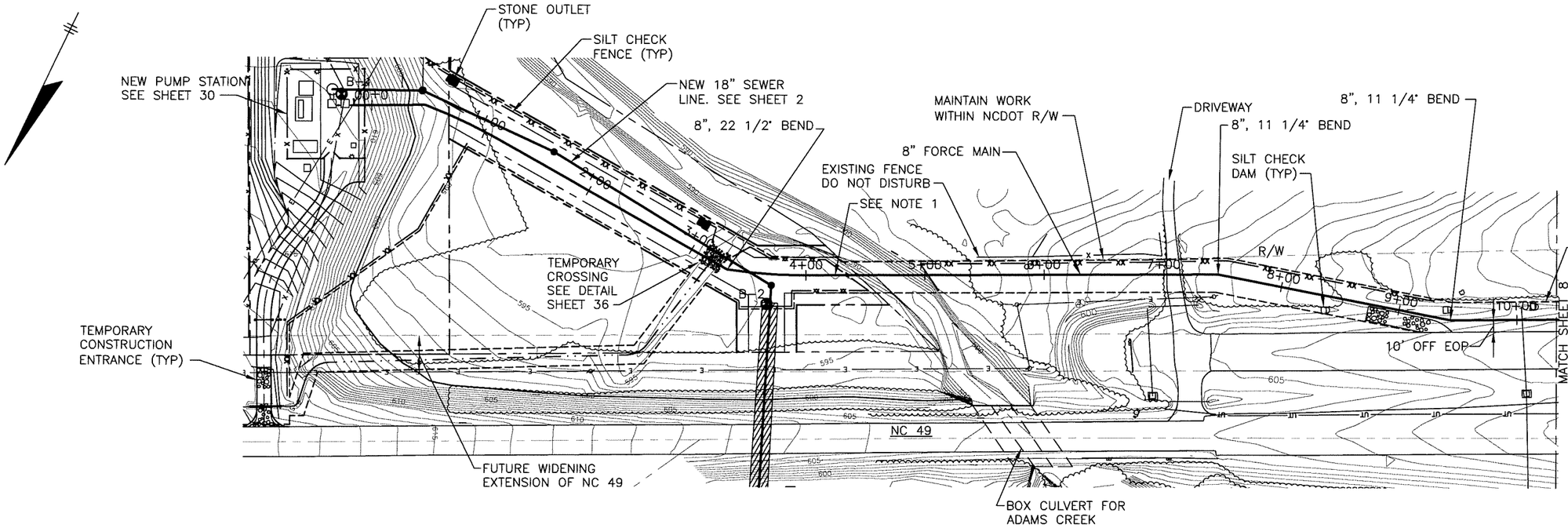

NOTES:
1. RESTORE AND RESEED AREAS ALONG THE CREEK AND INSTALL SILT FENCE IMMEDIATELY AFTER PIPE INSTALLATION.

PLAN

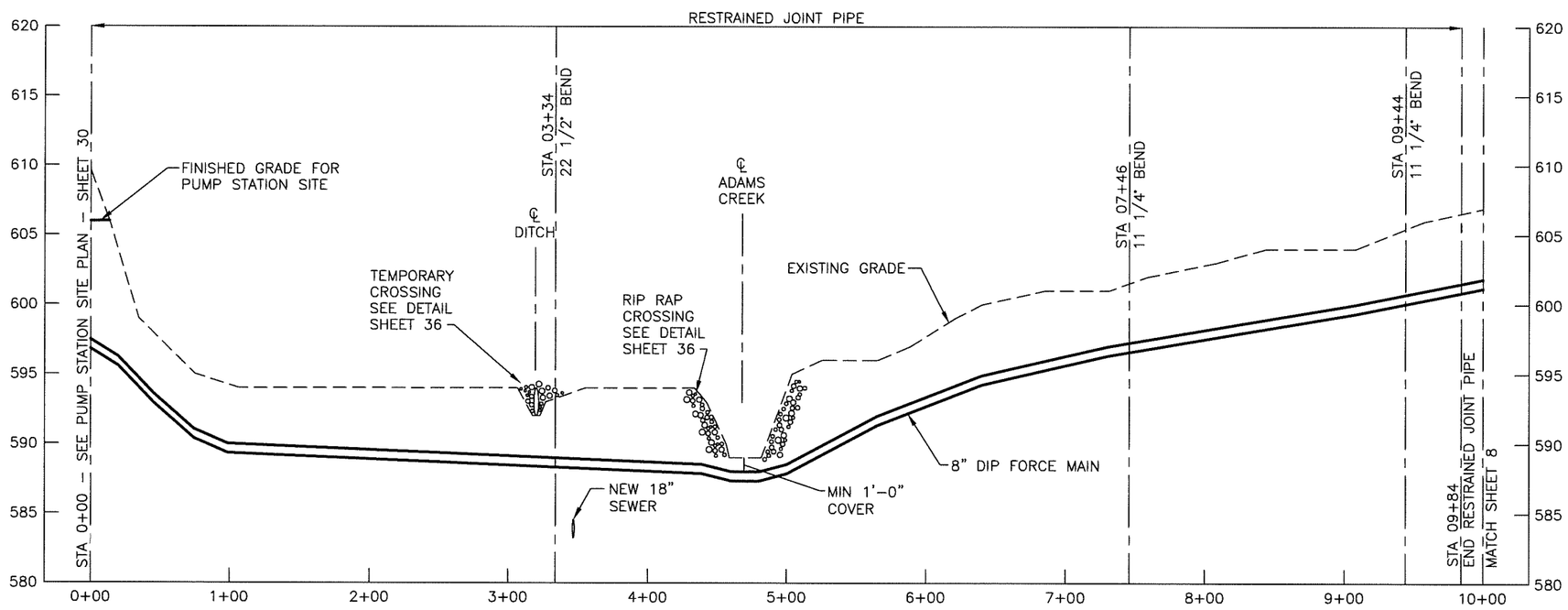

PROFILE

WILLIS ENGINEERS, 10700 SIKES PLACE, CHARLOTTE, NORTH CAROLINA, 28277 – NC LIC. NO. F-0114

NORTH CAROLINA PROFESSIONAL SEAL 24494 ENGINEER GREGORY J. WELLS

02 SEPT 11

IN CHARGE CAWjr DESIGNED CAWjr MADE BY AMA CHECKED GJW	V 5' 0 5' 10' H 50' 0 50' 100'	RECORD DRAWING TO THE BEST OF OUR KNOWLEDGE AND BELIEF THIS RECORD DRAWING SUBSTANTIALLY REPRESENTS THE PROJECT AS CONSTRUCTED	willis ENGINEERS	WATER AND SEWER AUTHORITY OF CABARRUS COUNTY WASTEWATER FACILITIES	MT. PLEASANT NORTHWEST SEWER EXTENSION FORCE MAIN PLAN AND PROFILE	1968.005 07REC.DWG SEPTEMBER 2011	7

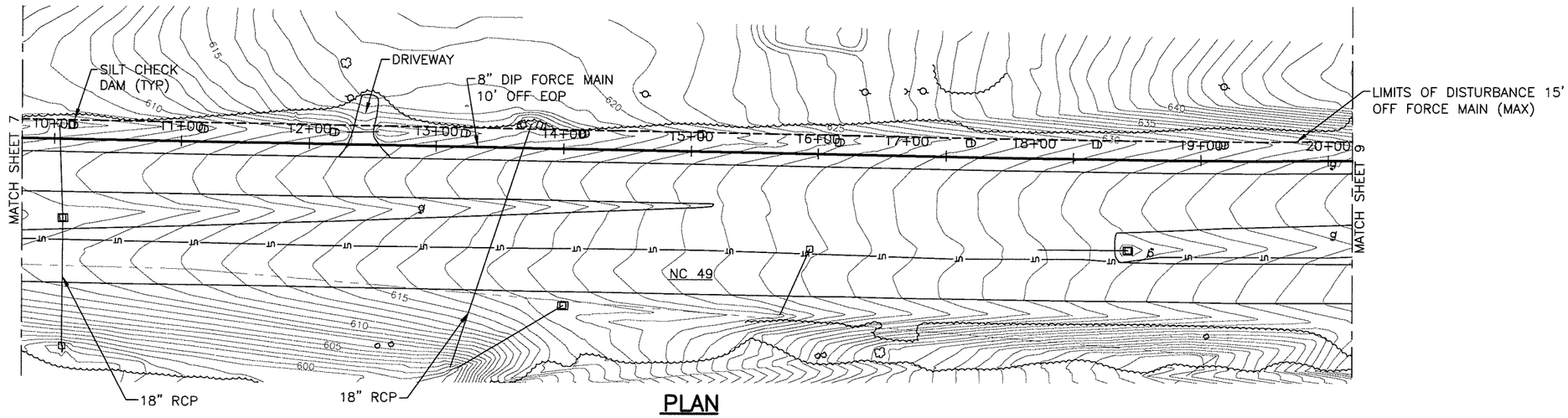

PLAN

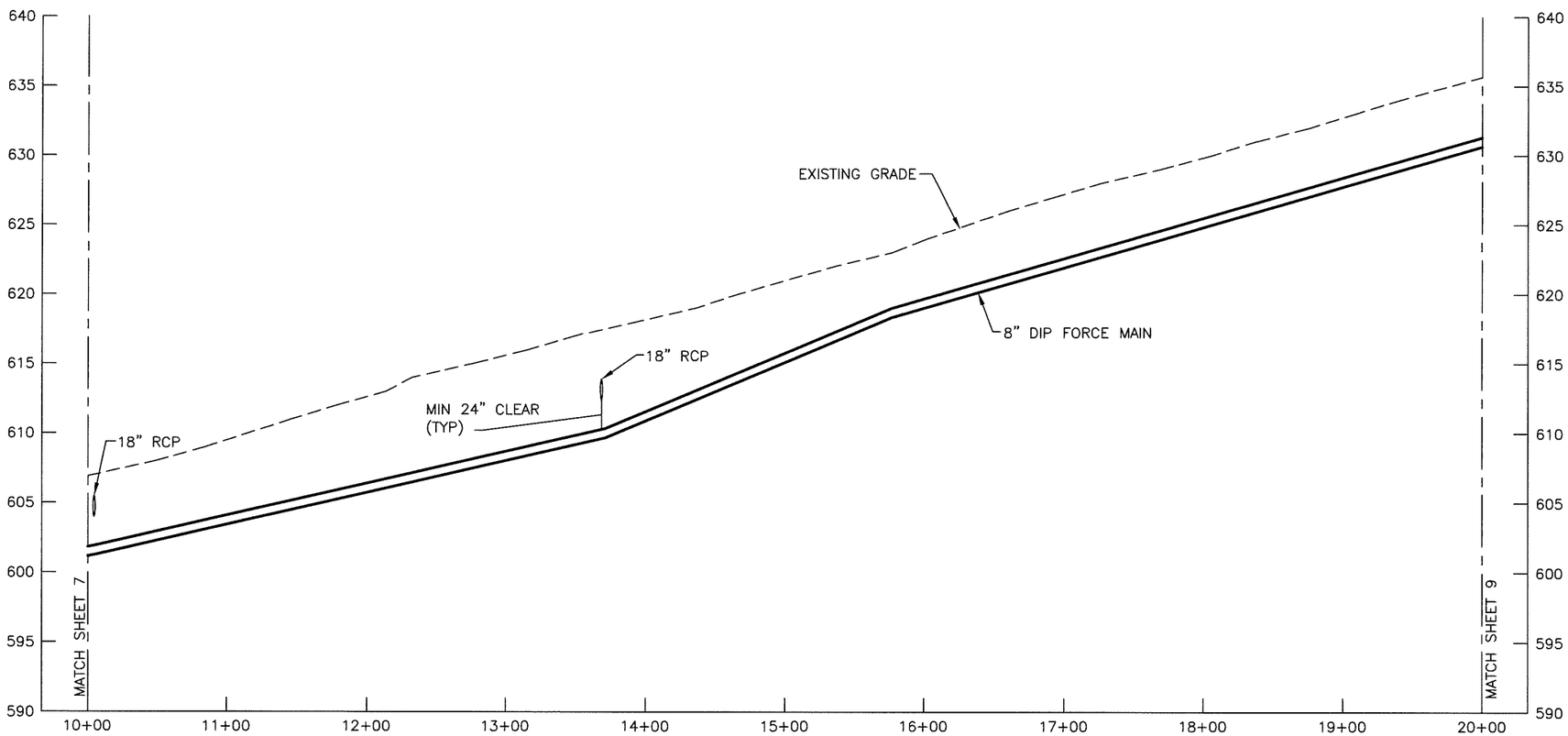

PROFILE

NORTH CAROLINA PROFESSIONAL SEAL 24494 ENGINEER GREGORY J. WELLS

02 SEPT 11

IN CHARGE CAWjr DESIGNED CAWjr MADE BY AMA CHECKED GJW	V 5' 0 5' 10' H 50' 0 50' 100'	RECORD DRAWING TO THE BEST OF OUR KNOWLEDGE AND BELIEF THIS RECORD DRAWING SUBSTANTIALLY REPRESENTS THE PROJECT AS CONSTRUCTED	willis ENGINEERS	WATER AND SEWER AUTHORITY OF CABARRUS COUNTY WASTEWATER FACILITIES	MT. PLEASANT NORTHWEST SEWER EXTENSION FORCE MAIN PLAN AND PROFILE	1968.005 08REC.DWG SEPTEMBER 2011	8

WILLIS ENGINEERS, 10700 SIKES PLACE, CHARLOTTE, NORTH CAROLINA, 28277 – NC LIC. NO. F-0114

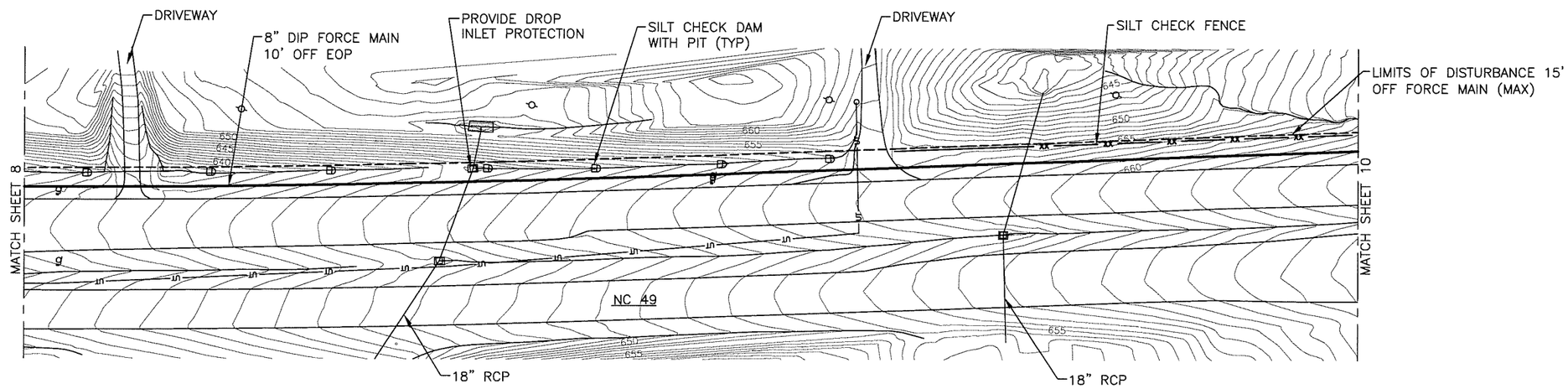

PLAN

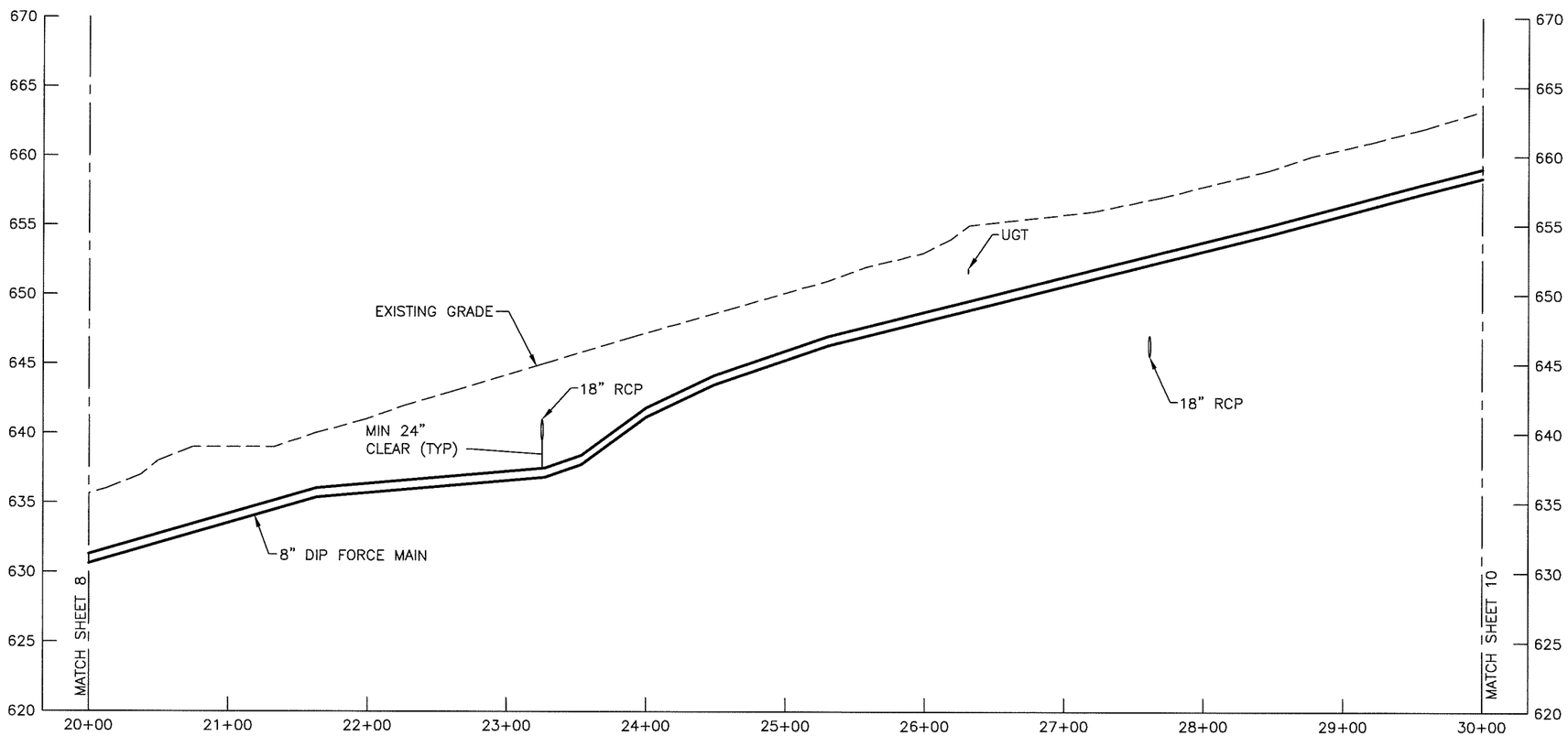

PROFILE

WILLIS ENGINEERS, 10700 SIKES PLACE, CHARLOTTE, NORTH CAROLINA, 28277 – NC LIC. NO. F-0114

NORTH CAROLINA PROFESSIONAL SEAL 24494 ENGINEER GREGORY J. WELLS

02 SEPT 11

IN CHARGE CAWjr DESIGNED CAWjr MADE BY AMA CHECKED GJW	V 5' 0 5' 10' H 50' 0 50' 100'	RECORD DRAWING TO THE BEST OF OUR KNOWLEDGE AND BELIEF THIS RECORD DRAWING SUBSTANTIALLY REPRESENTS THE PROJECT AS CONSTRUCTED	willis ENGINEERS	WATER AND SEWER AUTHORITY OF CABARRUS COUNTY **WASTEWATER FACILITIES**	MT. PLEASANT NORTHWEST SEWER EXTENSION **FORE MAIN PLAN AND PROFILE**	1968.005 09REC.DWG SEPTEMBER 2011	9

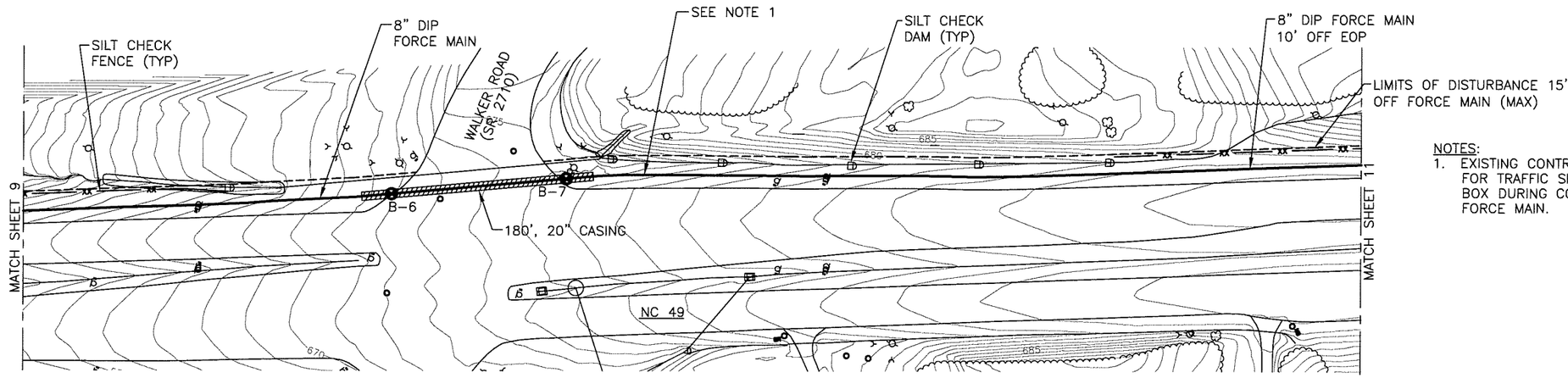

NOTES:
1. EXISTING CONTROL WIRING BOX FOR TRAFFIC SIGNALS. RELOCATE BOX DURING CONSTRUCTION OF FORCE MAIN.

PLAN

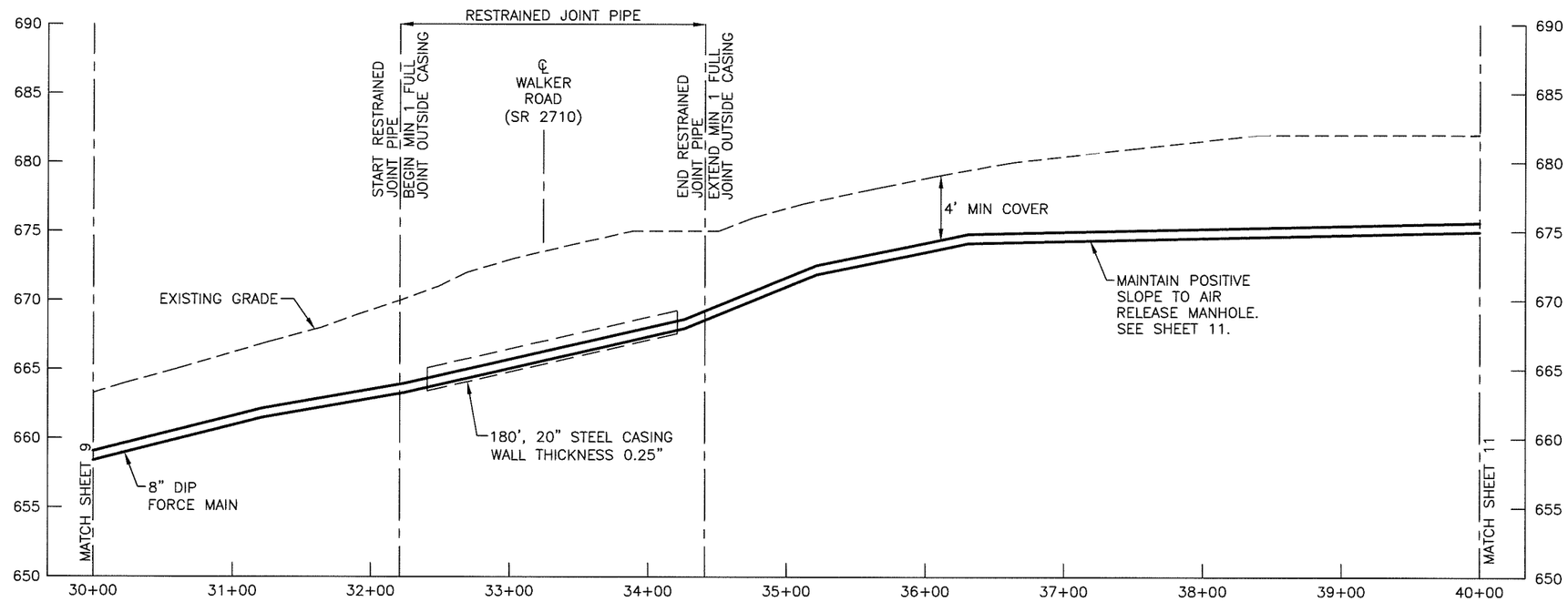

PROFILE

WILLIS ENGINEERS, 10700 SIKES PLACE, CHARLOTTE, NORTH CAROLINA, 28277 - NC LIC. NO. F-0114

NORTH CAROLINA PROFESSIONAL SEAL 24494 ENGINEER GREGORY J. WELLS

02 SEPT 11

IN CHARGE CAWjr DESIGNED CAWjr MADE BY AMA CHECKED GJW	V 5' 0 5' 10' H 50' 0 50' 100'	RECORD DRAWING TO THE BEST OF OUR KNOWLEDGE AND BELIEF THIS RECORD DRAWING SUBSTANTIALLY REPRESENTS THE PROJECT AS CONSTRUCTED	willis ENGINEERS	WATER AND SEWER AUTHORITY OF CABARRUS COUNTY WASTEWATER FACILITIES	MT. PLEASANT NORTHWEST SEWER EXTENSION FORCE MAIN PLAN AND PROFILE	1968.005 10REC.DWG SEPTEMBER 2011	10

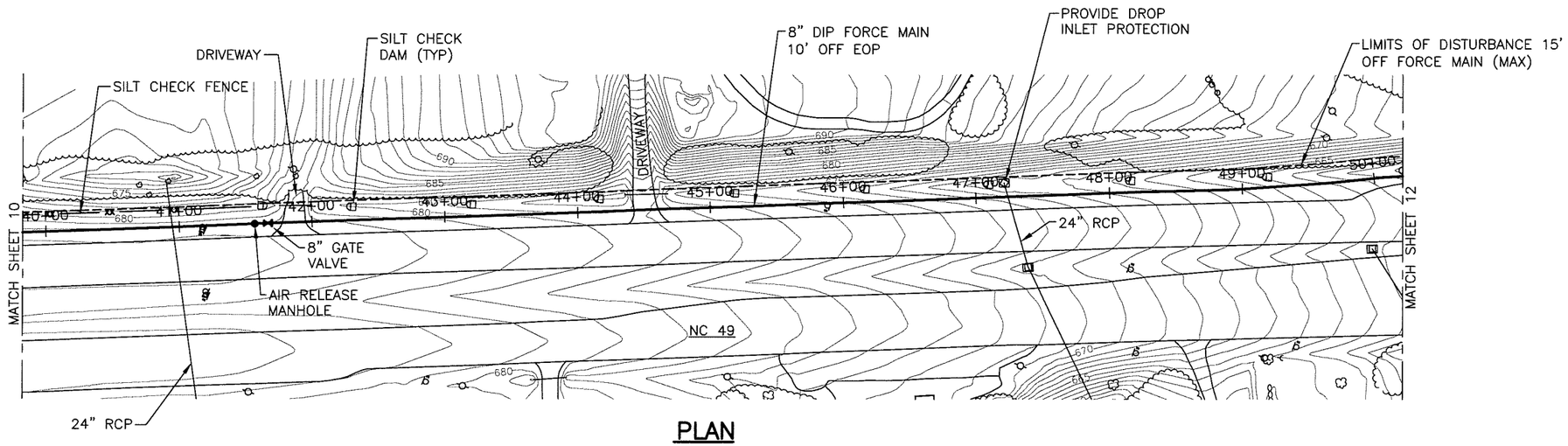

PLAN

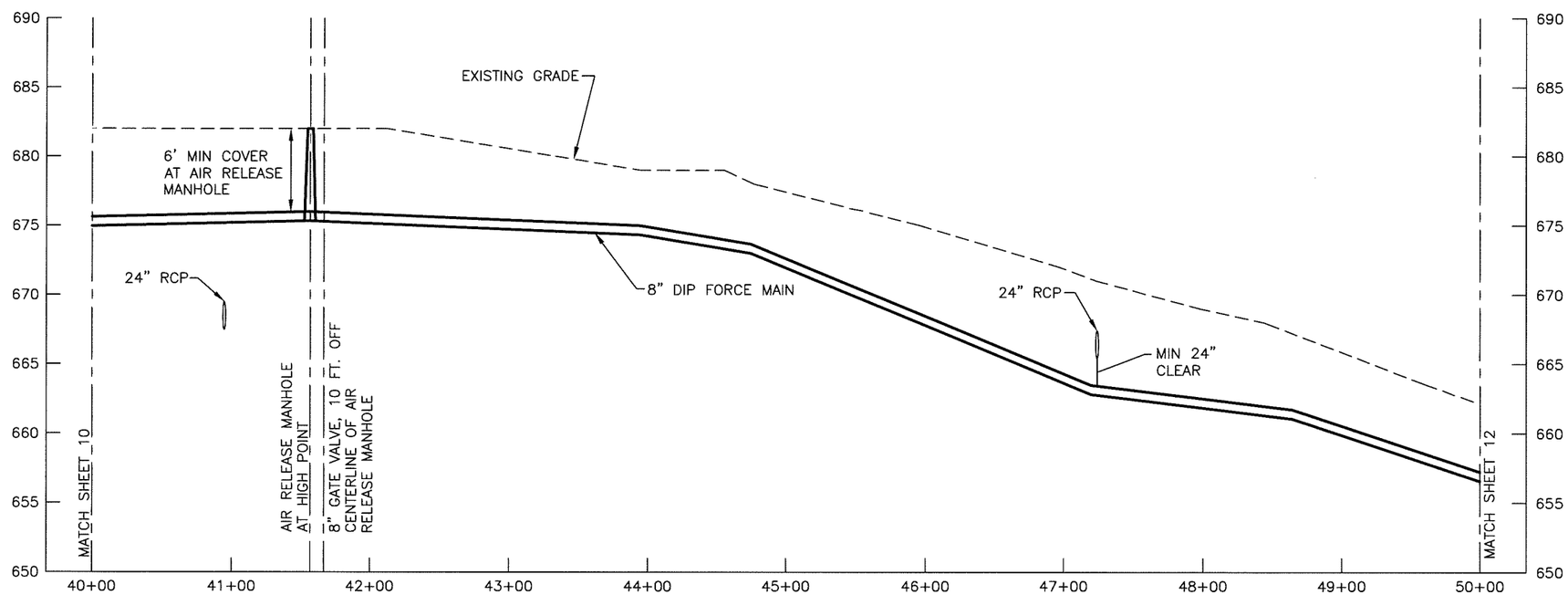

PROFILE

WILLIS ENGINEERS, 10700 SIKES PLACE, CHARLOTTE, NORTH CAROLINA, 28277 – NC LIC. NO. F-0114

NORTH CAROLINA PROFESSIONAL SEAL 24494 ENGINEER GREGORY J. WELLS

02 SEPT 11

IN CHARGE CAWjr DESIGNED CAWjr MADE BY AMA CHECKED GJW	V 5' 0 5' 10' H 50' 0 50' 100'	RECORD DRAWING TO THE BEST OF OUR KNOWLEDGE AND BELIEF THIS RECORD DRAWING SUBSTANTIALLY REPRESENTS THE PROJECT AS CONSTRUCTED	willis ENGINEERS	WATER AND SEWER AUTHORITY OF CABARRUS COUNTY **WASTEWATER FACILITIES**	MT. PLEASANT NORTHWEST SEWER EXTENSION **FORCE MAIN PLAN AND PROFILE**	1968.005 11REC.DWG SEPTEMBER 2011	11

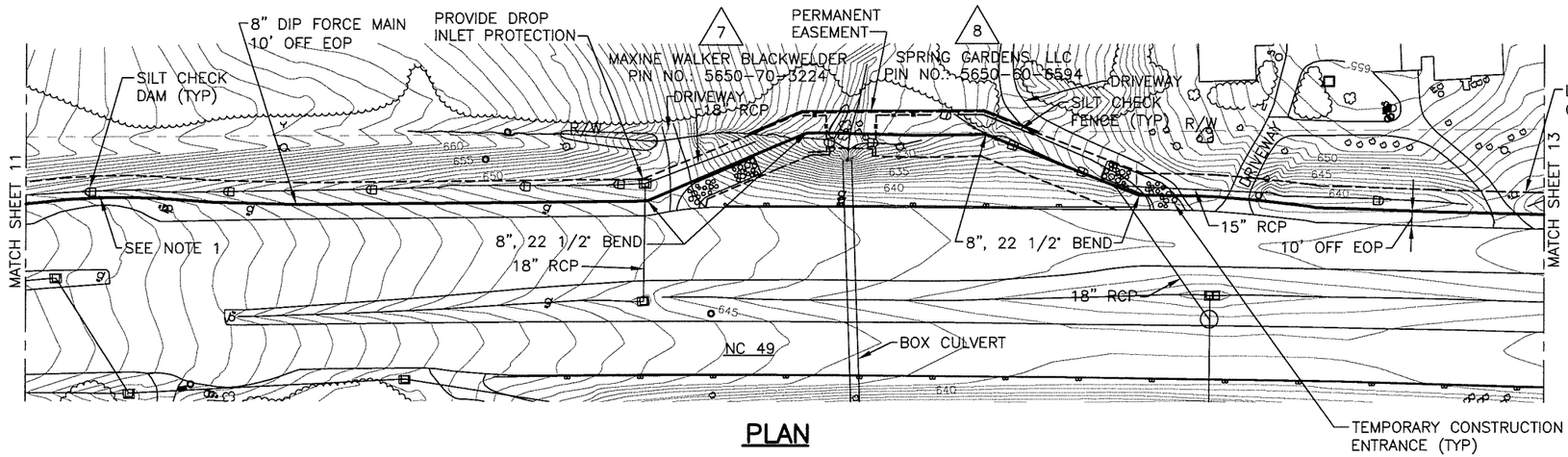

NOTES:
1. DEFLECT PIPE TO MAINTAIN 5' OFF EOP AT TURNAROUND.

PLAN

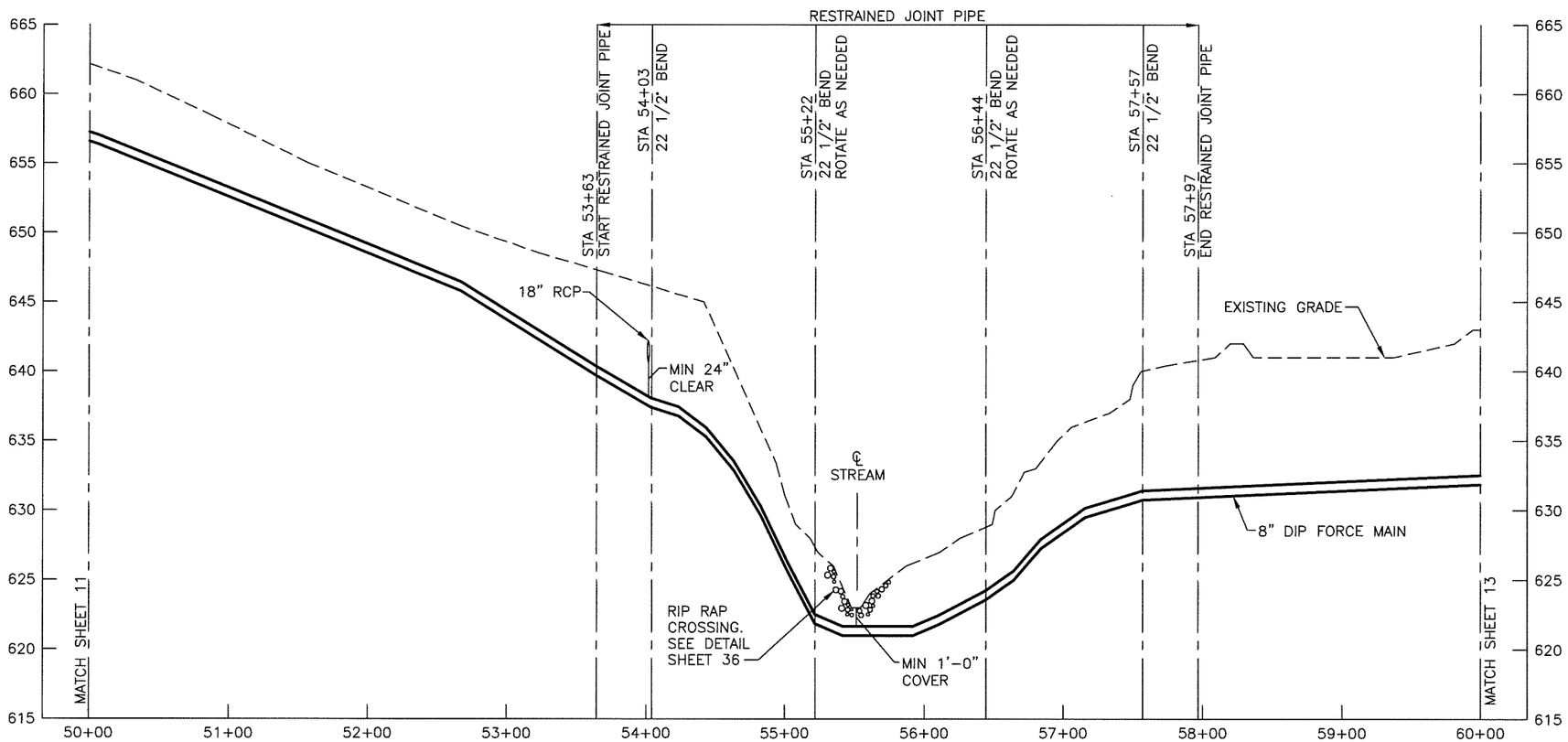

PROFILE

NORTH CAROLINA PROFESSIONAL SEAL 24494 ENGINEER GREGORY J. WELLS

02 SEPT 11

IN CHARGE CAWjr DESIGNED CAWjr MADE BY AMA CHECKED GJW	V 5' 0 5' 10' H 50' 0 50' 100'	RECORD DRAWING TO THE BEST OF OUR KNOWLEDGE AND BELIEF THIS RECORD DRAWING SUBSTANTIALLY REPRESENTS THE PROJECT AS CONSTRUCTED	willis ENGINEERS	WATER AND SEWER AUTHORITY OF CABARRUS COUNTY WASTEWATER FACILITIES	MT. PLEASANT NORTHWEST SEWER EXTENSION FORCE MAIN PLAN AND PROFILE	1968.005 12REC.DWG SEPTEMBER 2011	12

WILLIS ENGINEERS, 10700 SIKES PLACE, CHARLOTTE, NORTH CAROLINA, 28277 - NC LIC. NO. F-0114

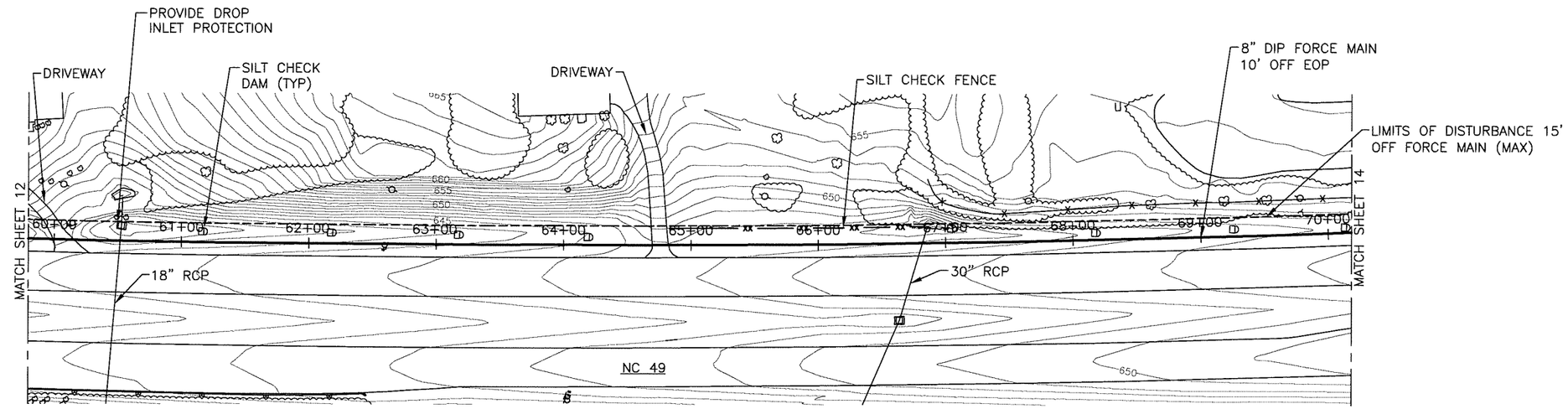

PLAN

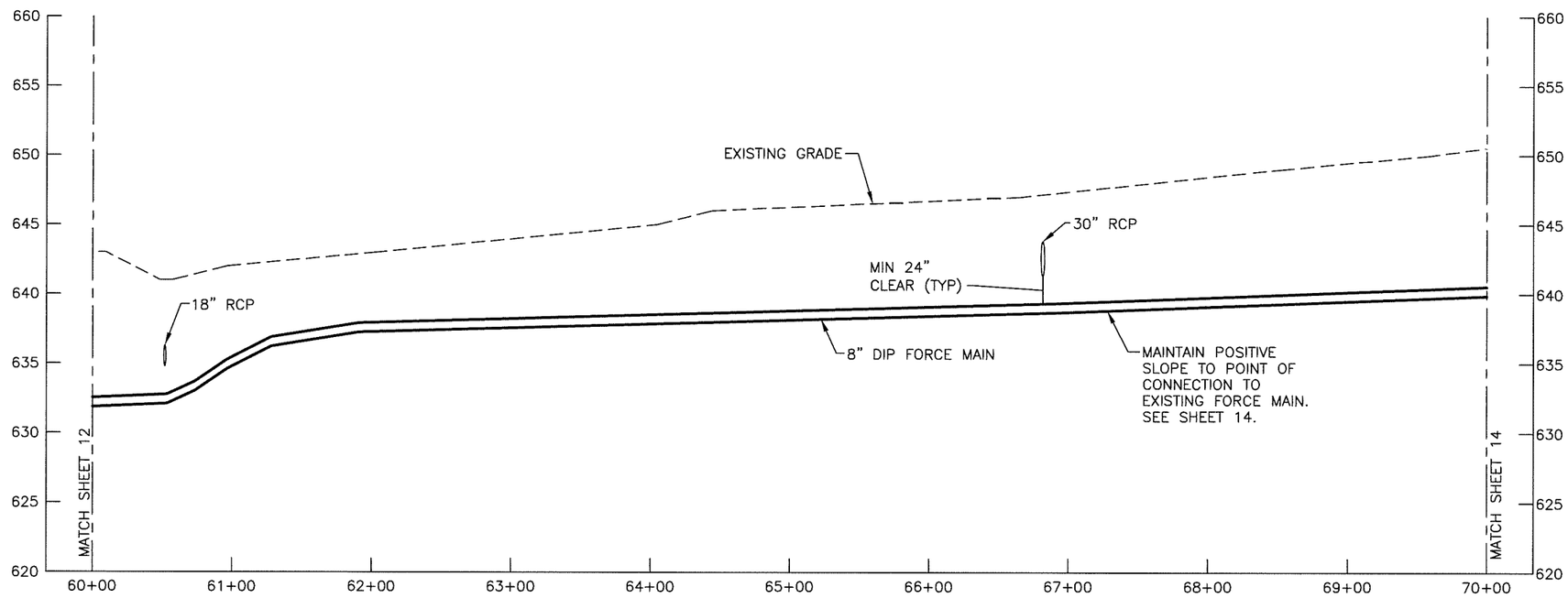

PROFILE

WILLIS ENGINEERS, 10700 SIKES PLACE, CHARLOTTE, NORTH CAROLINA, 28277 – NC LIC. NO. F-0114

NORTH CAROLINA PROFESSIONAL SEAL 24494 ENGINEER GREGORY J. WELLS

02 SEPT 11

IN CHARGE CAWjr DESIGNED CAWjr MADE BY AMA CHECKED GJW	V 5' 0 5' 10' H 50' 0 50' 100'	RECORD DRAWING TO THE BEST OF OUR KNOWLEDGE AND BELIEF THIS RECORD DRAWING SUBSTANTIALLY REPRESENTS THE PROJECT AS CONSTRUCTED	willis ENGINEERS	WATER AND SEWER AUTHORITY OF CABARRUS COUNTY WASTEWATER FACILITIES	MT. PLEASANT NORTHWEST SEWER EXTENSION FORCE MAIN PLAN AND PROFILE	1968.005 13REC.DWG SEPTEMBER 2011	13

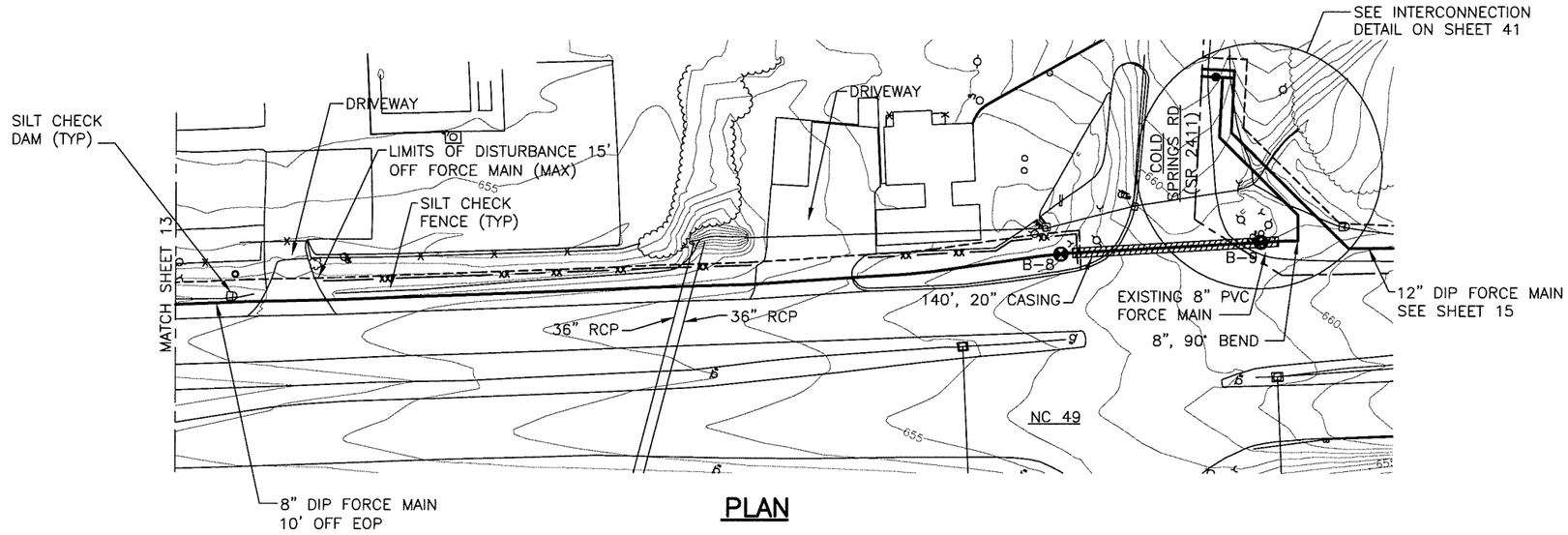

PLAN

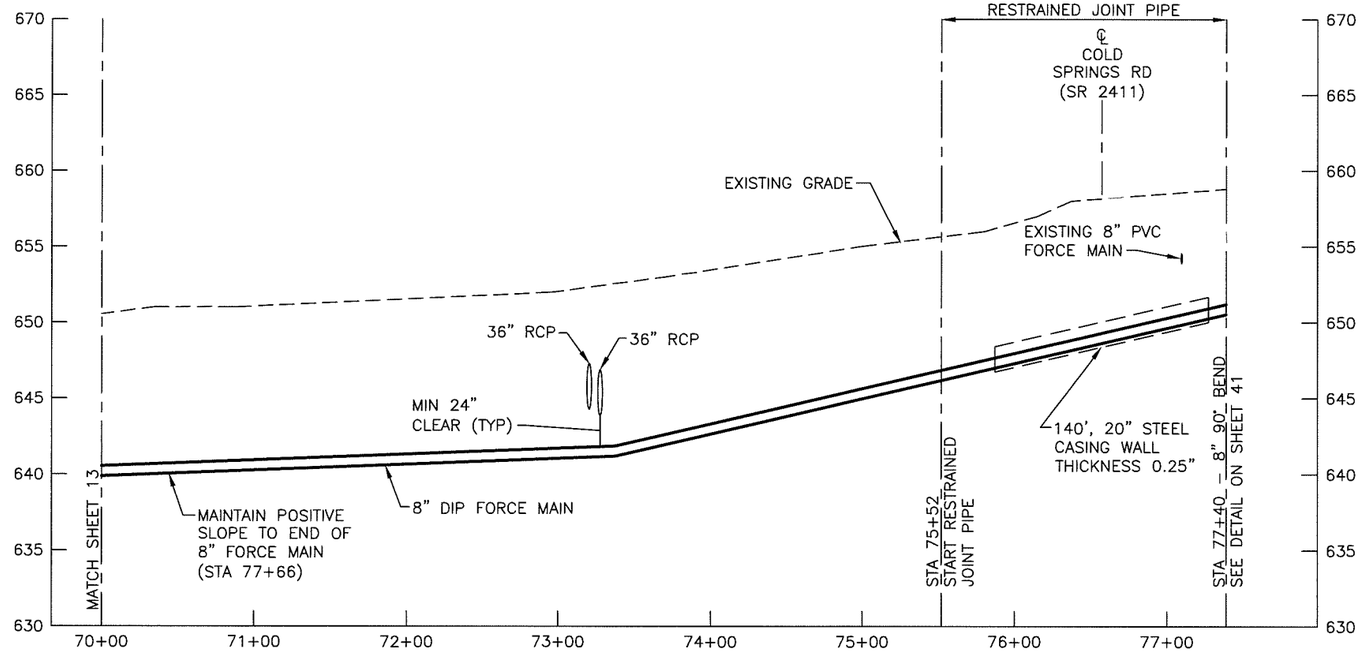

PROFILE

NORTH CAROLINA PROFESSIONAL SEAL 24494 ENGINEER GREGORY J. WELLS

02 SEPT 11

IN CHARGE CAWjr DESIGNED CAWjr MADE BY AMA CHECKED GJW	V 5' 0 5' 10' H 50' 0 50' 100'	RECORD DRAWING TO THE BEST OF OUR KNOWLEDGE AND BELIEF THIS RECORD DRAWING SUBSTANTIALLY REPRESENTS THE PROJECT AS CONSTRUCTED	willis ENGINEERS	WATER AND SEWER AUTHORITY OF CABARRUS COUNTY WASTEWATER FACILITIES	MT. PLEASANT NORTHWEST SEWER EXTENSION FORCE MAIN PLAN AND PROFILE	1968.005 14REC.DWG SEPTEMBER 2011	14

WILLIS ENGINEERS, 10700 SIKES PLACE, CHARLOTTE, NORTH CAROLINA, 28277 – NC LIC. NO. F-0114

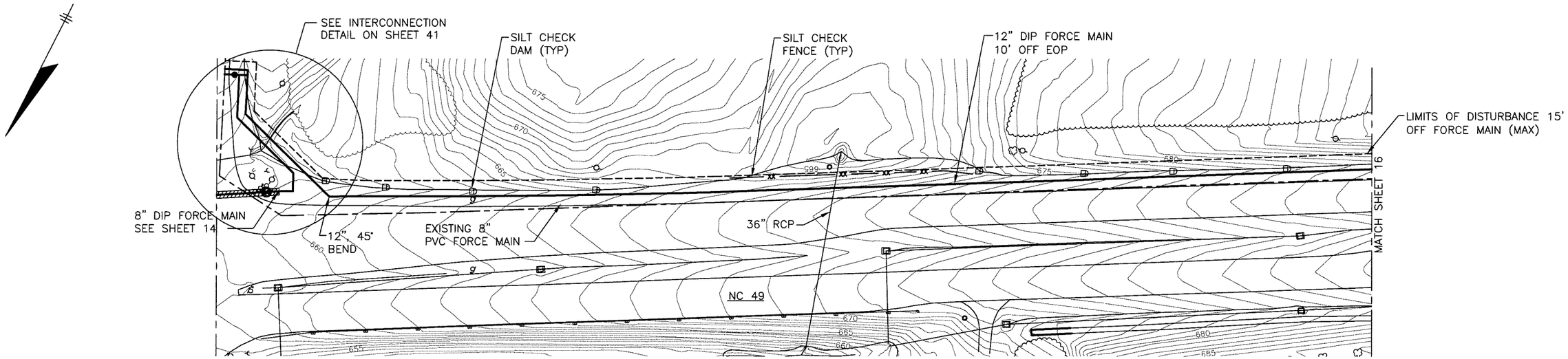

PLAN

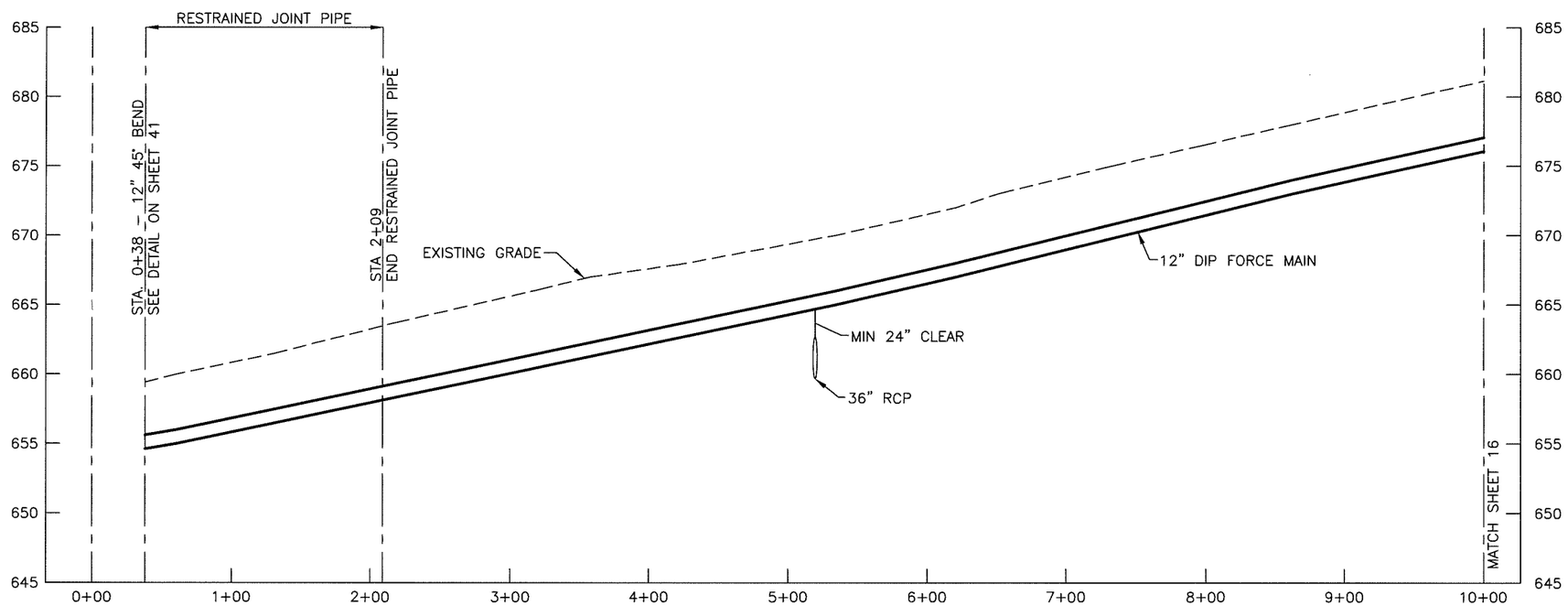

PROFILE

WILLIS ENGINEERS, 10700 SIKES PLACE, CHARLOTTE, NORTH CAROLINA, 28277 – NC LIC. NO. F-0114

NORTH CAROLINA PROFESSIONAL SEAL 24494 ENGINEER GREGORY J. WELLS

02 SEPT 11

IN CHARGE CAWjr DESIGNED CAWjr MADE BY AMA CHECKED GJW	V 5' 0 5' 10' H 50' 0 50' 100'	RECORD DRAWING TO THE BEST OF OUR KNOWLEDGE AND BELIEF THIS RECORD DRAWING SUBSTANTIALLY REPRESENTS THE PROJECT AS CONSTRUCTED	willis ENGINEERS	WATER AND SEWER AUTHORITY OF CABARRUS COUNTY WASTEWATER FACILITIES	MT. PLEASANT NORTHWEST SEWER EXTENSION FORCE MAIN PLAN AND PROFILE	1968.005 15REC.DWG SEPTEMBER 2011	15

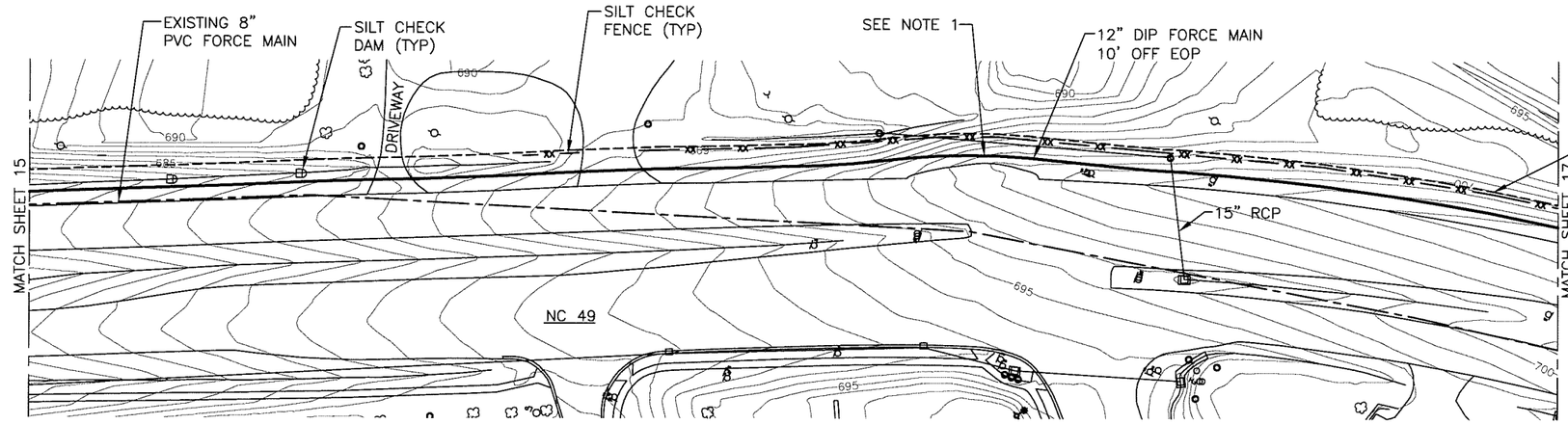

NOTES:
1. DEFLECT PIPE TO MAINTAIN 5' OFF EOP AT TURNAROUND.

PLAN

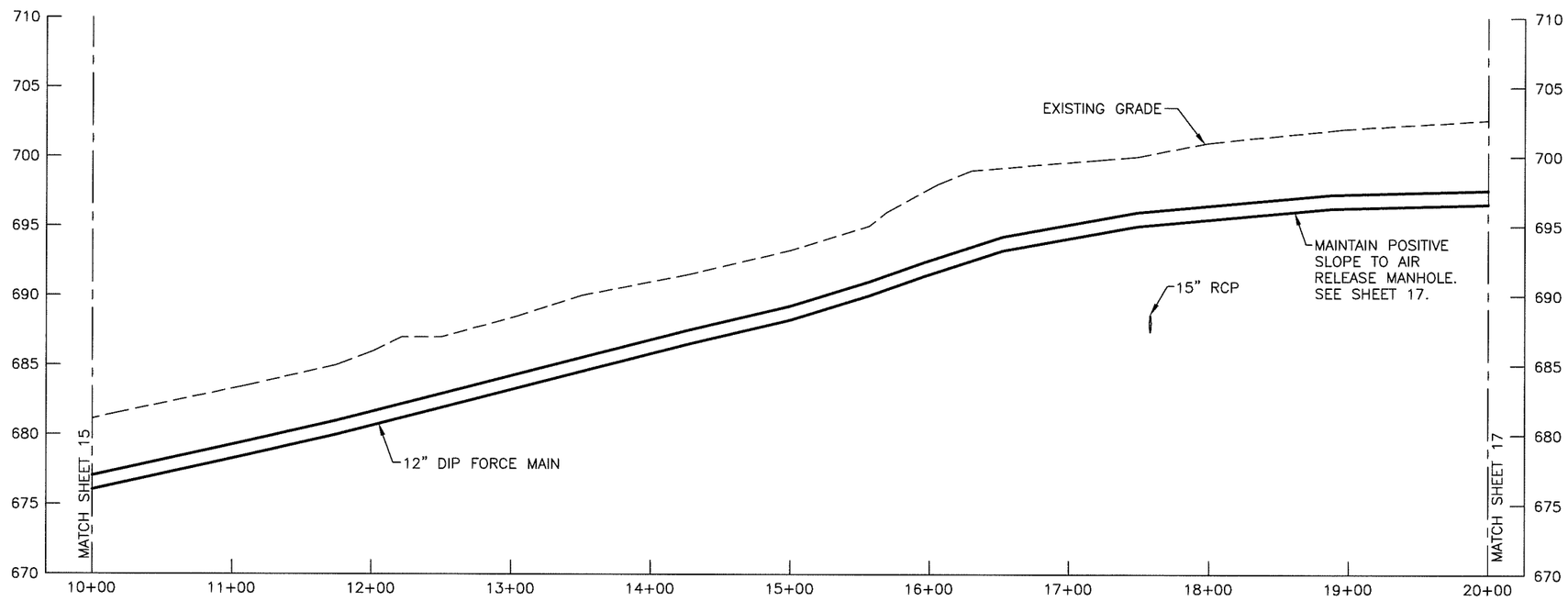

PROFILE

WILLIS ENGINEERS, 10700 SIKES PLACE, CHARLOTTE, NORTH CAROLINA, 28277 – NC LIC. NO. F-0114

NORTH CAROLINA PROFESSIONAL SEAL 24494 ENGINEER GREGORY J. WELLS

02 SEPT 11

IN CHARGE CAWjr DESIGNED CAWjr MADE BY AMA CHECKED GJW	V 5' 0 5' 10' H 50' 0 50' 100'	RECORD DRAWING TO THE BEST OF OUR KNOWLEDGE AND BELIEF THIS RECORD DRAWING SUBSTANTIALLY REPRESENTS THE PROJECT AS CONSTRUCTED	willis ENGINEERS	WATER AND SEWER AUTHORITY OF CABARRUS COUNTY WASTEWATER FACILITIES	MT. PLEASANT NORTHWEST SEWER EXTENSION FORCE MAIN PLAN AND PROFILE	1968.005 16REC.DWG SEPTEMBER 2011	16

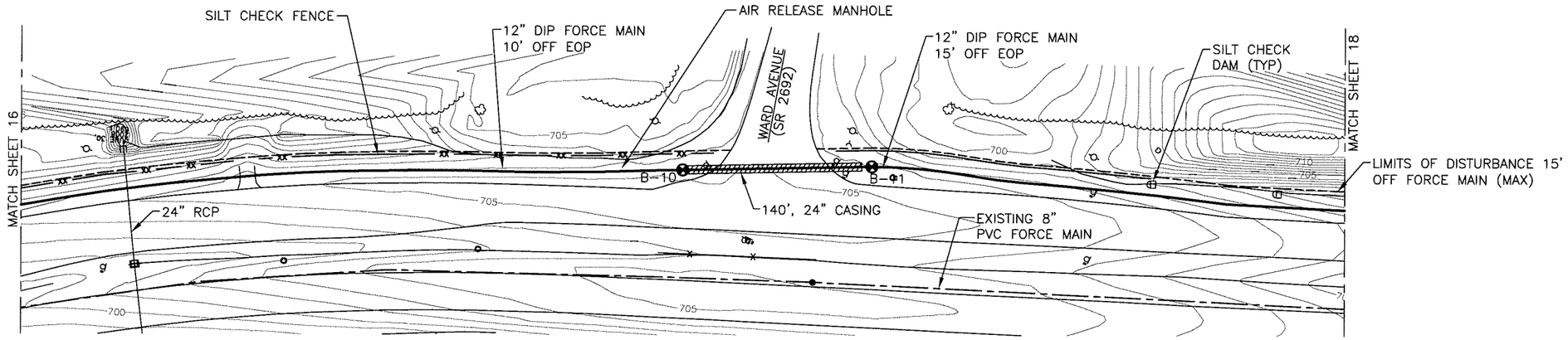

PLAN

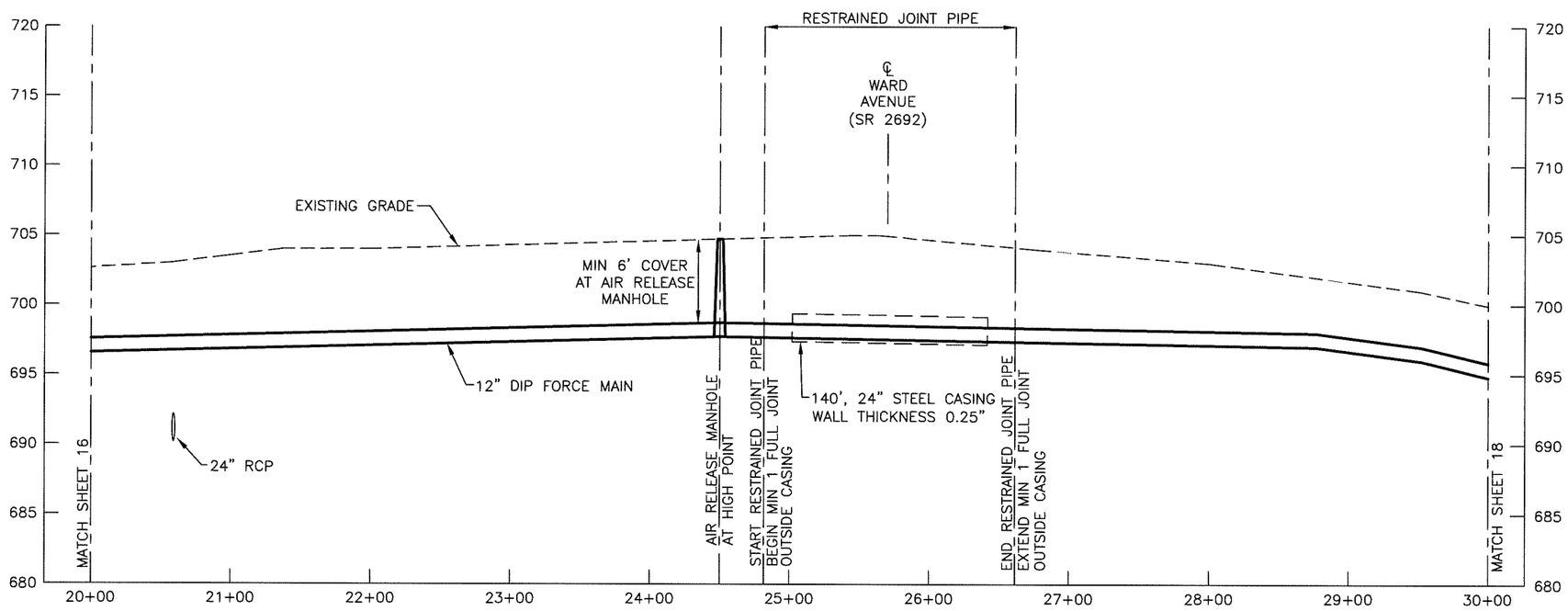

PROFILE

WILLIS ENGINEERS, 10700 SIKES PLACE, CHARLOTTE, NORTH CAROLINA, 28277 – NC LIC. NO. F-0114

NORTH CAROLINA PROFESSIONAL SEAL 24494 ENGINEER GREGORY J. WELLS

02 SEPT 11

IN CHARGE CAWjr DESIGNED CAWjr MADE BY AMA CHECKED GJW	V 5' 0 5' 10' H 50' 0 50' 100'	RECORD DRAWING TO THE BEST OF OUR KNOWLEDGE AND BELIEF THIS RECORD DRAWING SUBSTANTIALLY REPRESENTS THE PROJECT AS CONSTRUCTED	willis ENGINEERS	WATER AND SEWER AUTHORITY OF CABARRUS COUNTY WASTEWATER FACILITIES	MT. PLEASANT NORTHWEST SEWER EXTENSION FORCE MAIN PLAN AND PROFILE	1968.005 17REC.DWG SEPTEMBER 2011	17

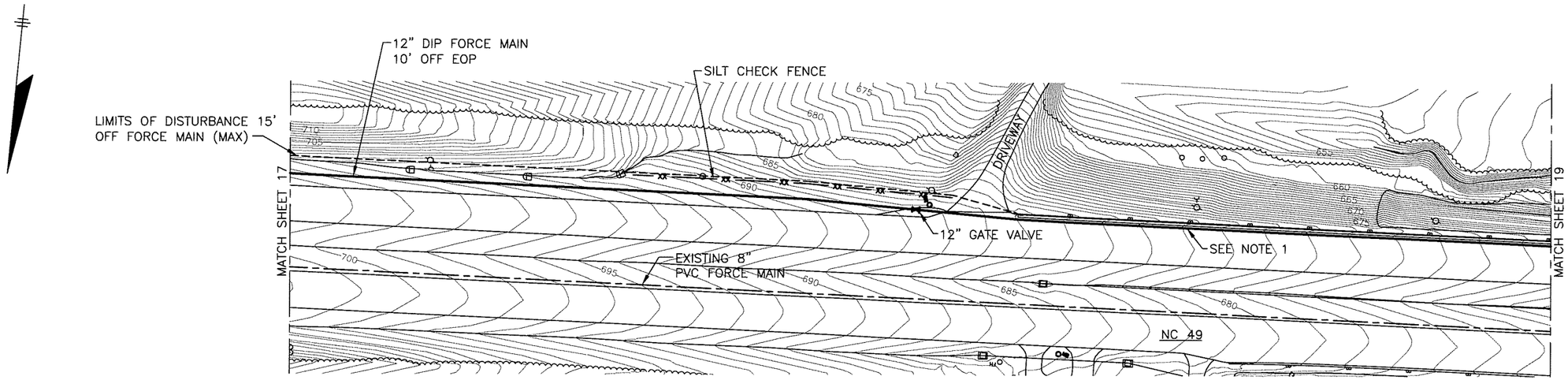

PLAN

NOTES:

1. 12" FORCE MAIN BETWEEN STA 35+80 AND STA 51+30 SHALL BE INSTALLED 2 FEET INSIDE EDGE OF CURB WITH 3 FEET OF COVER. SEE NC 49 SECTION DETAIL ON SHEET 37.
2. EXCAVATED MATERIAL TO BE HAULED OFF-SITE IMMEDIATELY AFTER REMOVAL WITHOUT BEING STOCKPILED.

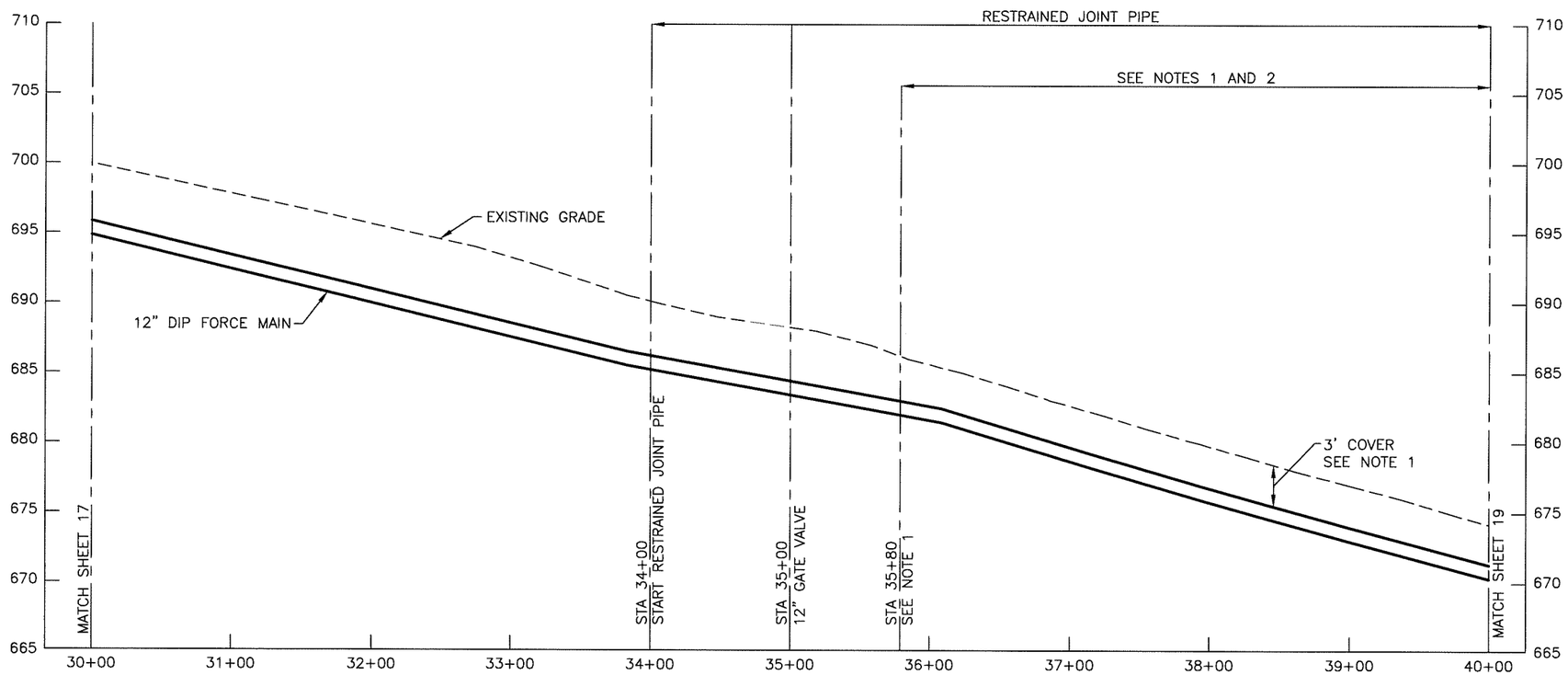

PROFILE

WILLIS ENGINEERS, 10700 SIKES PLACE, CHARLOTTE, NORTH CAROLINA, 28277 – NC LIC. NO. F-0114

NORTH CAROLINA PROFESSIONAL SEAL 24494 ENGINEER GREGORY J. WELLS

02 SEPT 11

IN CHARGE CAWjr DESIGNED CAWjr MADE BY AMA CHECKED GJW	V 5' 0 5' 10' H 50' 0 50' 100'	RECORD DRAWING TO THE BEST OF OUR KNOWLEDGE AND BELIEF THIS RECORD DRAWING SUBSTANTIALLY REPRESENTS THE PROJECT AS CONSTRUCTED	willis ENGINEERS	WATER AND SEWER AUTHORITY OF CABARRUS COUNTY WASTEWATER FACILITIES	MT. PLEASANT NORTHWEST SEWER EXTENSION FORCE MAIN PLAN AND PROFILE	1968.005 18REC.DWG SEPTEMBER 2011	18

NOTES:

1. 12" FORCE MAIN BETWEEN STA 35+80 AND STA 51+30 SHALL BE INSTALLED 2 FEET INSIDE EDGE OF CURB WITH 3 FEET OF COVER. SEE NC 49 SECTION DETAIL ON SHEET 37.
2. EXCAVATED MATERIAL TO BE HAULED OFF-SITE IMMEDIATELY AFTER REMOVAL WITHOUT BEING STOCKPILED.

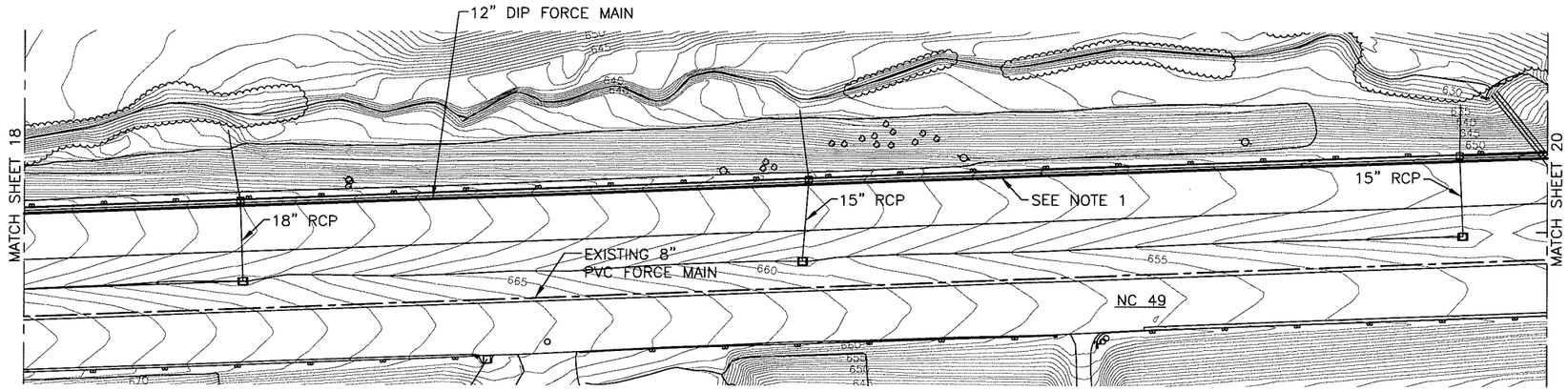

PLAN

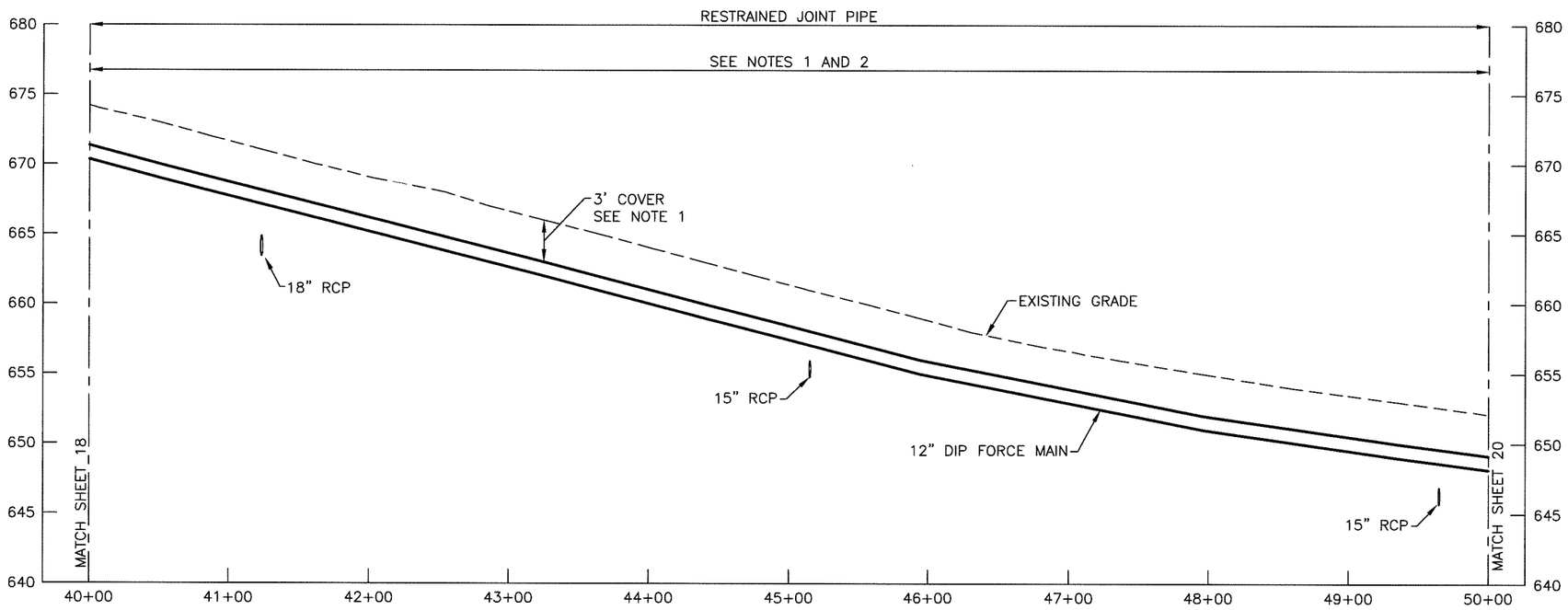

PROFILE

WILLIS ENGINEERS, 10700 SIKES PLACE, CHARLOTTE, NORTH CAROLINA, 28277 - NC LIC. NO. F-0114

NORTH CAROLINA PROFESSIONAL SEAL 24494 ENGINEER GREGORY J. WELLS

02 SEPT 11

IN CHARGE CAWjr DESIGNED CAWjr MADE BY AMA CHECKED GJW	V 5' 0 5' 10' H 50' 0 50' 100'	RECORD DRAWING TO THE BEST OF OUR KNOWLEDGE AND BELIEF THIS RECORD DRAWING SUBSTANTIALLY REPRESENTS THE PROJECT AS CONSTRUCTED	willis ENGINEERS	WATER AND SEWER AUTHORITY OF CABARRUS COUNTY WASTEWATER FACILITIES	MT. PLEASANT NORTHWEST SEWER EXTENSION FORCE MAIN PLAN AND PROFILE	1968.005 19REC.DWG SEPTEMBER 2011	19

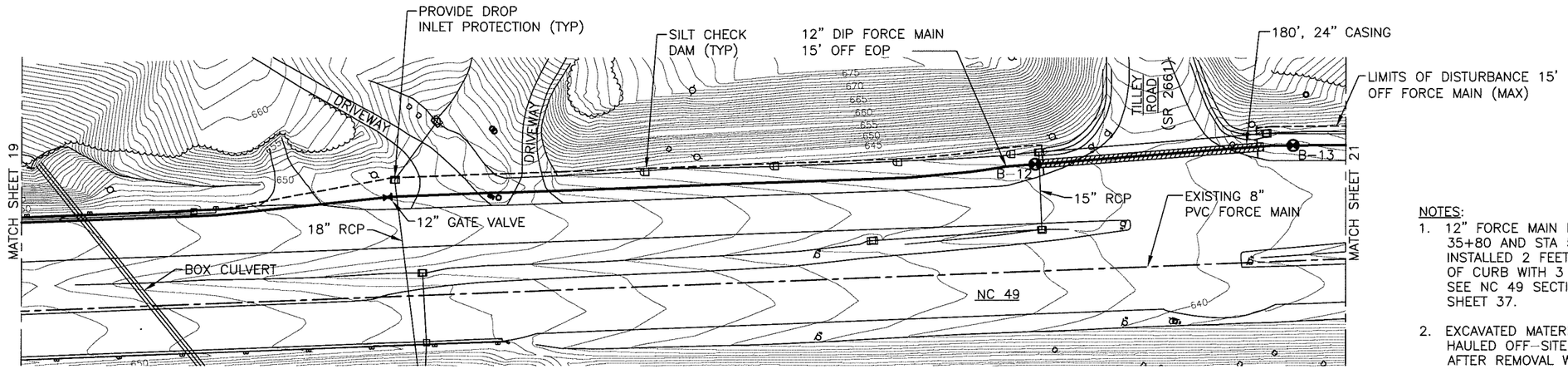

NOTES:

1. 12" FORCE MAIN BETWEEN STA 35+80 AND STA 51+30 SHALL BE INSTALLED 2 FEET INSIDE EDGE OF CURB WITH 3 FEET OF COVER. SEE NC 49 SECTION DETAIL ON SHEET 37.
2. EXCAVATED MATERIAL TO BE HAULED OFF-SITE IMMEDIATELY AFTER REMOVAL WITHOUT BEING STOCKPILED.

PLAN

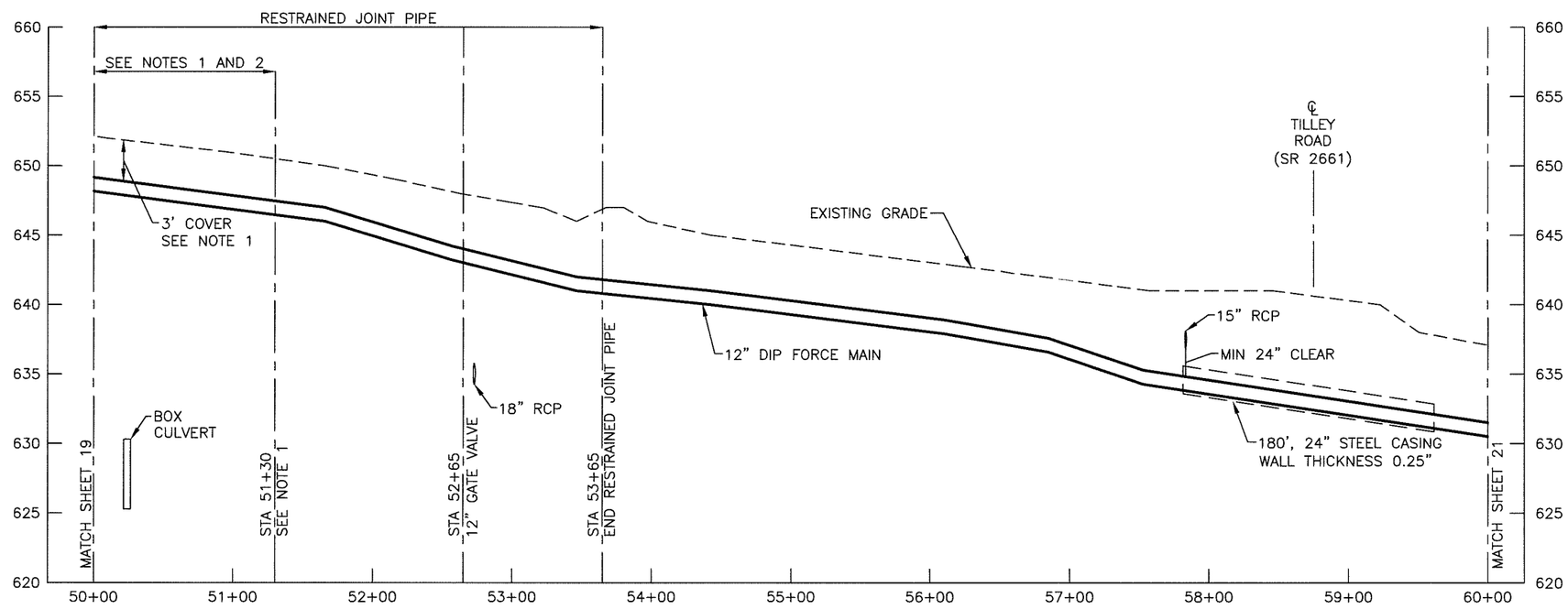

PROFILE

WILLIS ENGINEERS, 10700 SIKES PLACE, CHARLOTTE, NORTH CAROLINA, 28277 - NC LIC. NO. F-0114

NORTH CAROLINA PROFESSIONAL SEAL 24494 ENGINEER GREGORY J. WELLS

02 SEPT 11

IN CHARGE CAWjr DESIGNED CAWjr MADE BY AMA CHECKED GJW	V 5' 0 5' 10' H 50' 0 50' 100'	RECORD DRAWING TO THE BEST OF OUR KNOWLEDGE AND BELIEF THIS RECORD DRAWING SUBSTANTIALLY REPRESENTS THE PROJECT AS CONSTRUCTED	willis ENGINEERS	WATER AND SEWER AUTHORITY OF CABARRUS COUNTY WASTEWATER FACILITIES	MT. PLEASANT NORTHWEST SEWER EXTENSION FORCE MAIN PLAN AND PROFILE	1968.005 20REC.DWG SEPTEMBER 2011	20

NOTES:
1. PROVIDE TYPE "D" BEDDING FOR 5' EACH SIDE OF 18" RCP. SEE DETAIL ON SHEET 37.

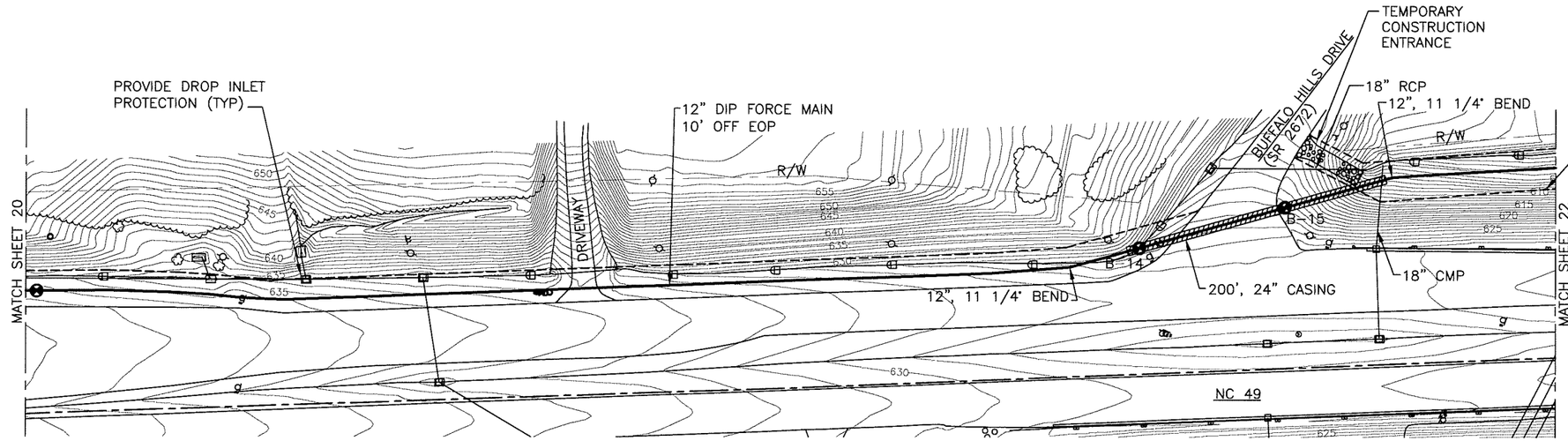

PLAN

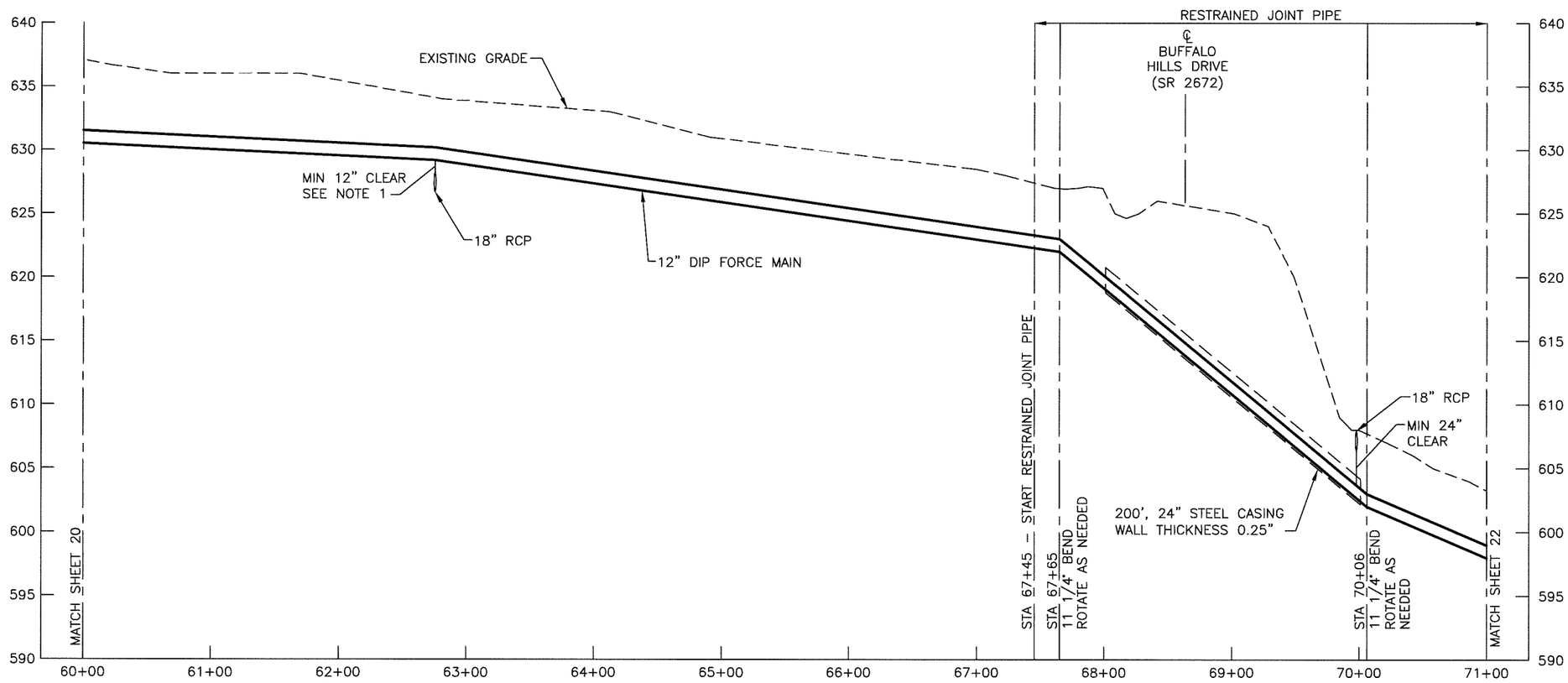

PROFILE

NORTH CAROLINA PROFESSIONAL SEAL 24494 ENGINEER GREGORY J. WELLS

02 SEPT 11

IN CHARGE CAWjr DESIGNED CAWjr MADE BY AMA CHECKED GJW	V 5' 0 5' 10' H 50' 0 50' 100'	RECORD DRAWING TO THE BEST OF OUR KNOWLEDGE AND BELIEF THIS RECORD DRAWING SUBSTANTIALLY REPRESENTS THE PROJECT AS CONSTRUCTED	willis ENGINEERS	WATER AND SEWER AUTHORITY OF CABARRUS COUNTY WASTEWATER FACILITIES	MT. PLEASANT NORTHWEST SEWER EXTENSION FORCE MAIN PLAN AND PROFILE	1968.005 21REC.DWG SEPTEMBER 2011	21

WILLIS ENGINEERS, 10700 SIKES PLACE, CHARLOTTE, NORTH CAROLINA, 28277 – NC LIC. NO. F-0114

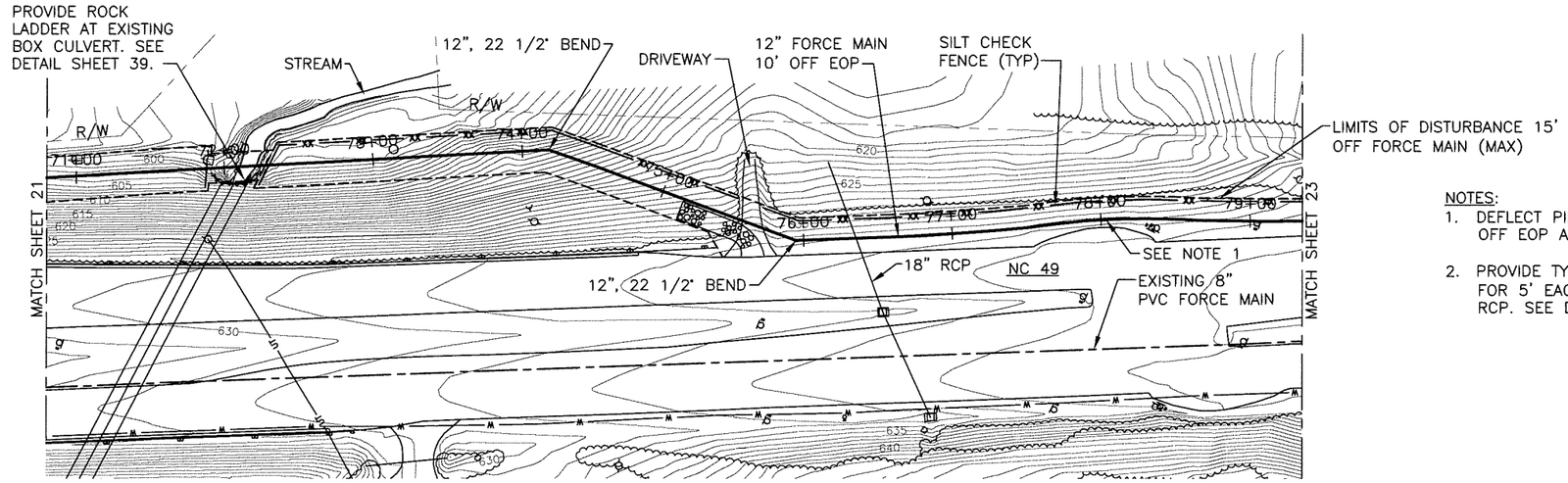

PLAN

NOTES:

1. DEFLECT PIPE TO MAINTAIN 5' OFF EOP AT TURNAROUND.
2. PROVIDE TYPE "D" BEDDING FOR 5' EACH SIDE OF 18" RCP. SEE DETAIL ON SHEET 37.

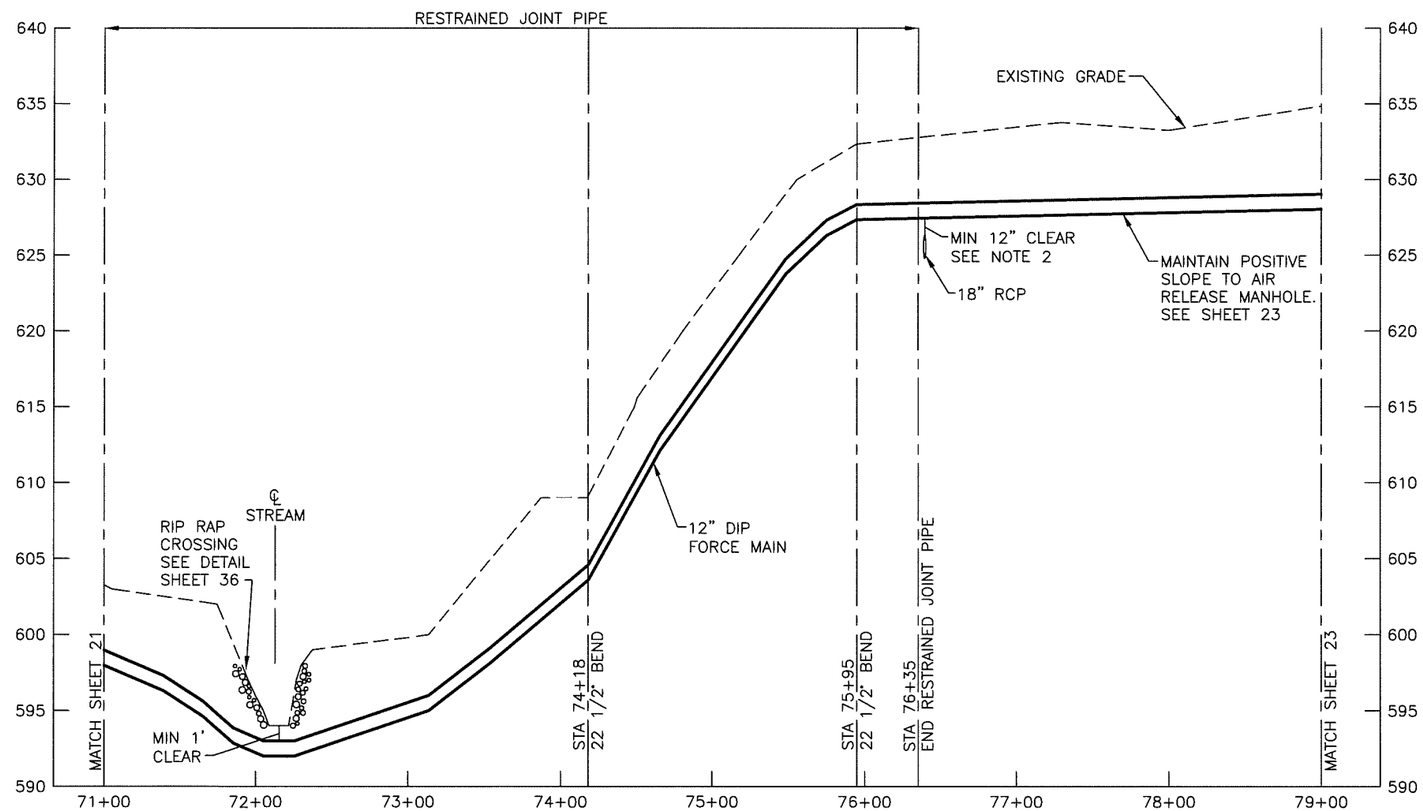

PROFILE

NORTH CAROLINA PROFESSIONAL SEAL 24494 ENGINEER GREGORY J. WELLS

02 SEPT 11

IN CHARGE CAWjr DESIGNED CAWjr MADE BY AMA CHECKED GJW	V 5' 0 5' 10' H 50' 0 50' 100'	RECORD DRAWING TO THE BEST OF OUR KNOWLEDGE AND BELIEF THIS RECORD DRAWING SUBSTANTIALLY REPRESENTS THE PROJECT AS CONSTRUCTED	willis ENGINEERS	WATER AND SEWER AUTHORITY OF CABARRUS COUNTY WASTEWATER FACILITIES	MT. PLEASANT NORTHWEST SEWER EXTENSION FORCE MAIN PLAN AND PROFILE	1968.005 22REC.DWG SEPTEMBER 2011	22

WILLIS ENGINEERS, 10700 SIKES PLACE, CHARLOTTE, NORTH CAROLINA, 28277 – NC LIC. NO. F-0114

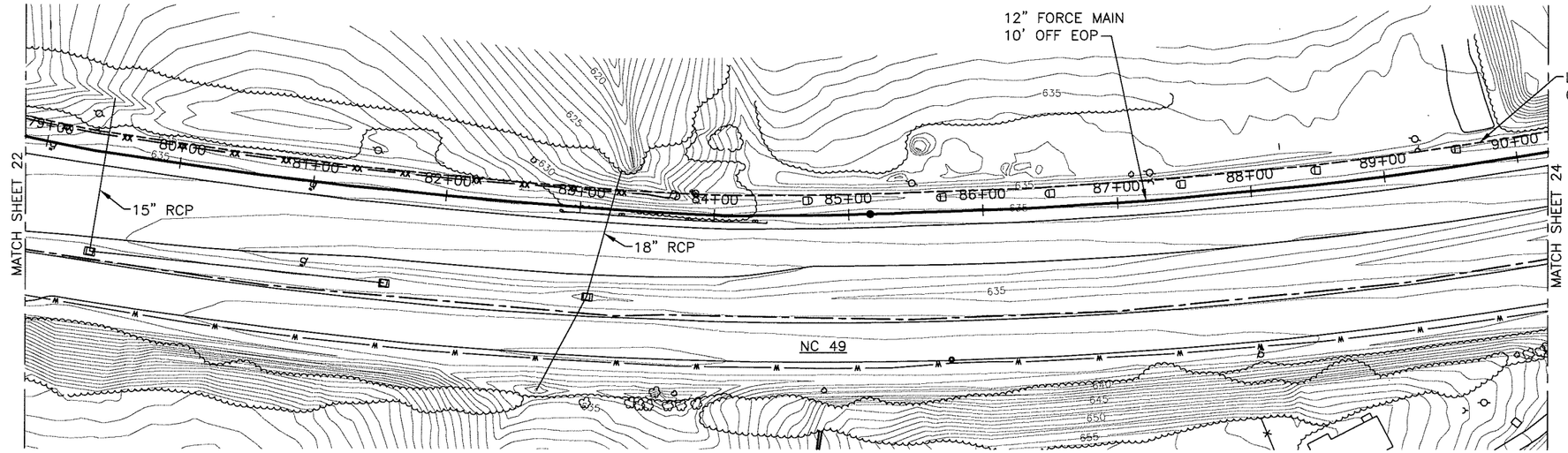

NOTES:

1. DEPTH OF COVER FOR 12" FORCE MAIN BEYOND AIR RELEASE MANHOLE MAY BE LESS THAN 4', BUT NOT LESS THAN 3' TO ACHIEVE CLEARANCE AT EXISTING 18" RCP AT STA. 91+28. SEE SHEET 24.

PLAN

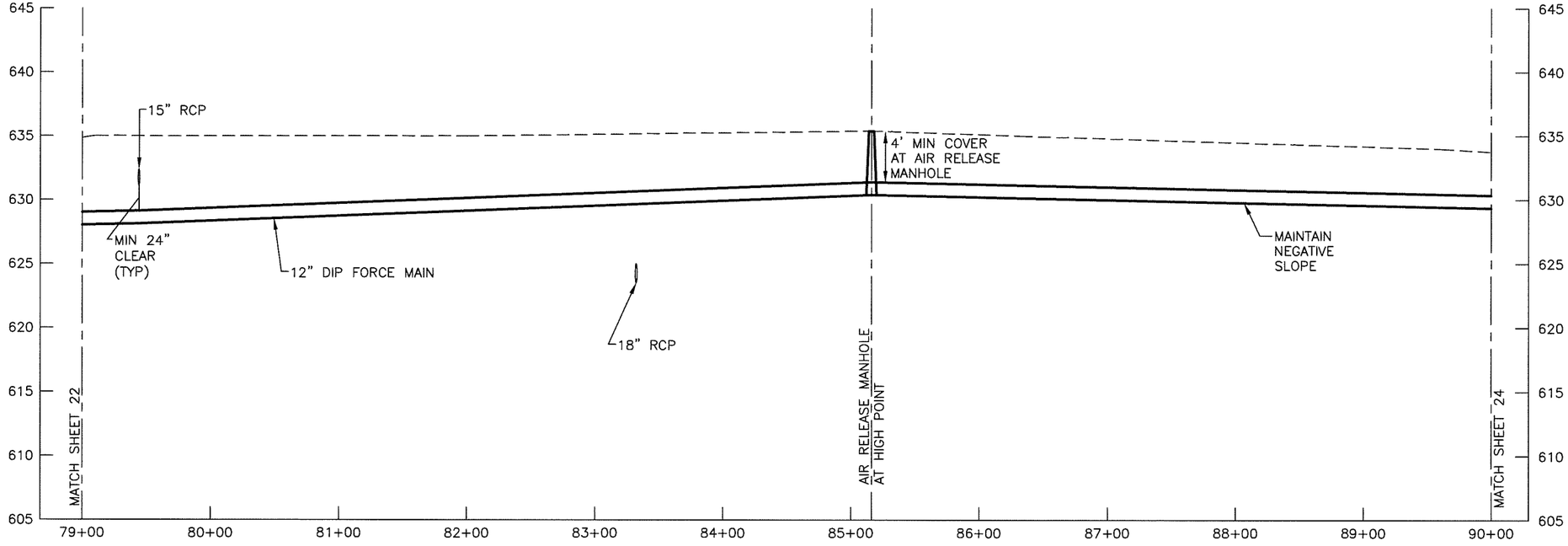

PROFILE

NORTH CAROLINA PROFESSIONAL SEAL 24494 ENGINEER GREGORY J. WELLS

02 SEPT 11

IN CHARGE CAWjr DESIGNED CAWjr MADE BY AMA CHECKED GJW	V 5' 0 5' 10' H 50' 0 50' 100'	RECORD DRAWING TO THE BEST OF OUR KNOWLEDGE AND BELIEF THIS RECORD DRAWING SUBSTANTIALLY REPRESENTS THE PROJECT AS CONSTRUCTED	willis ENGINEERS	WATER AND SEWER AUTHORITY OF CABARRUS COUNTY WASTEWATER FACILITIES	MT. PLEASANT NORTHWEST SEWER EXTENSION FORCE MAIN PLAN AND PROFILE	1968.005 23REC.DWG SEPTEMBER 2011	23

WILLIS ENGINEERS, 10700 SIKES PLACE, CHARLOTTE, NORTH CAROLINA, 28277 - NC LIC. NO. F-0114

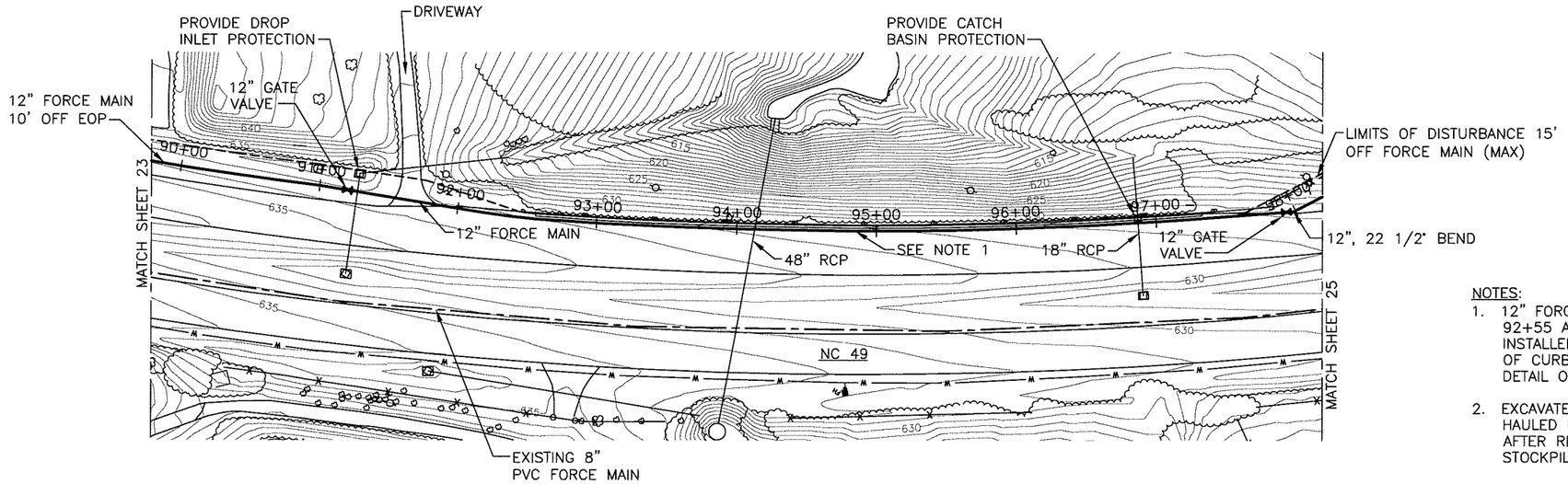

PLAN

NOTES:

1. 12" FORCE MAIN BETWEEN STA 92+55 AND STA 97+30 SHALL BE INSTALLED 2 FEET INSIDE EDGE OF CURB. SEE NC 49 SECTION DETAIL ON SHEET 37.
2. EXCAVATED MATERIAL TO BE HAULED OFF-SITE IMMEDIATELY AFTER REMOVAL WITHOUT BEING STOCKPILED.
3. PROVIDE TYPE "D" BEDDING FOR 5' EACH SIDE OF 18" RCP. SEE DETAIL ON SHEET 37.

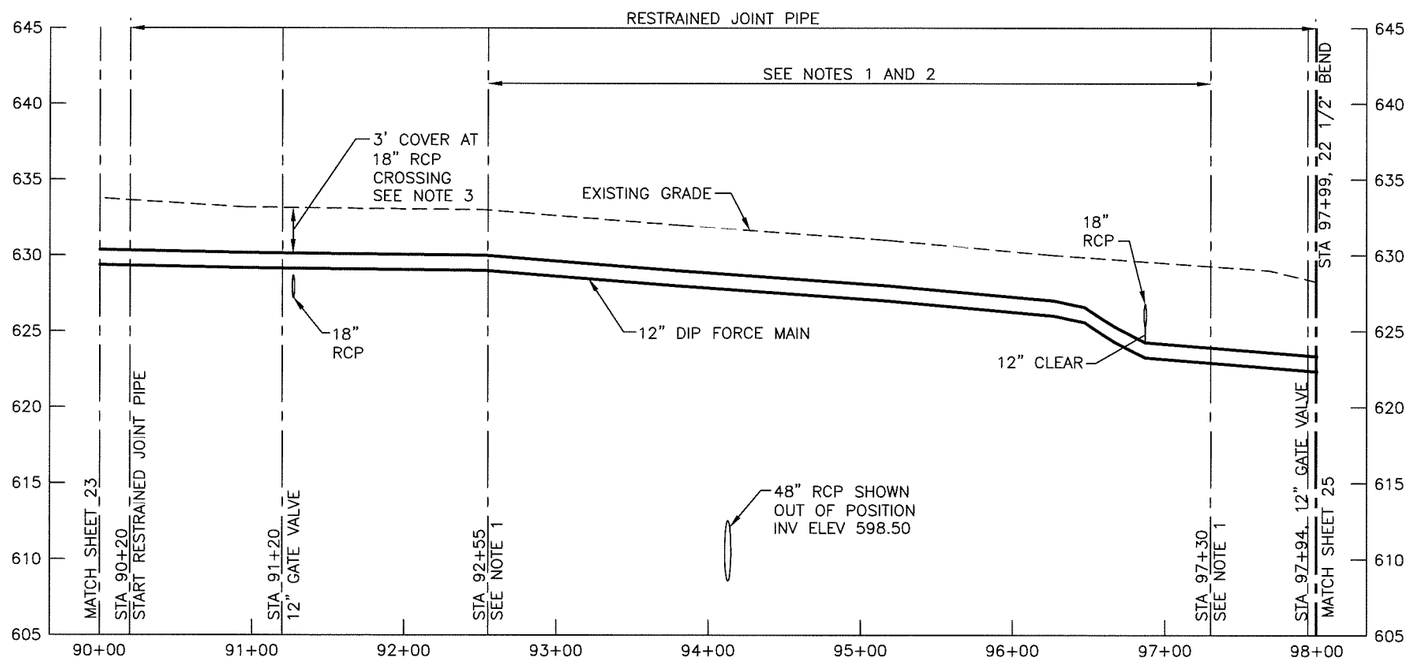

PROFILE

WILLIS ENGINEERS, 10700 SIKES PLACE, CHARLOTTE, NORTH CAROLINA, 28277 – NC LIC. NO. F-0114

NORTH CAROLINA PROFESSIONAL SEAL 24494 ENGINEER GREGORY J. WELLS

02 SEPT 11

IN CHARGE CAWjr DESIGNED CAWjr MADE BY AMA CHECKED GJW	V 5' 0 5' 10' H 50' 0 50' 100'	RECORD DRAWING TO THE BEST OF OUR KNOWLEDGE AND BELIEF THIS RECORD DRAWING SUBSTANTIALLY REPRESENTS THE PROJECT AS CONSTRUCTED	willis ENGINEERS	WATER AND SEWER AUTHORITY OF CABARRUS COUNTY WASTEWATER FACILITIES	MT. PLEASANT NORTHWEST SEWER EXTENSION FORCE MAIN PLAN AND PROFILE	1968.005 24REC.DWG SEPTEMBER 2011	24

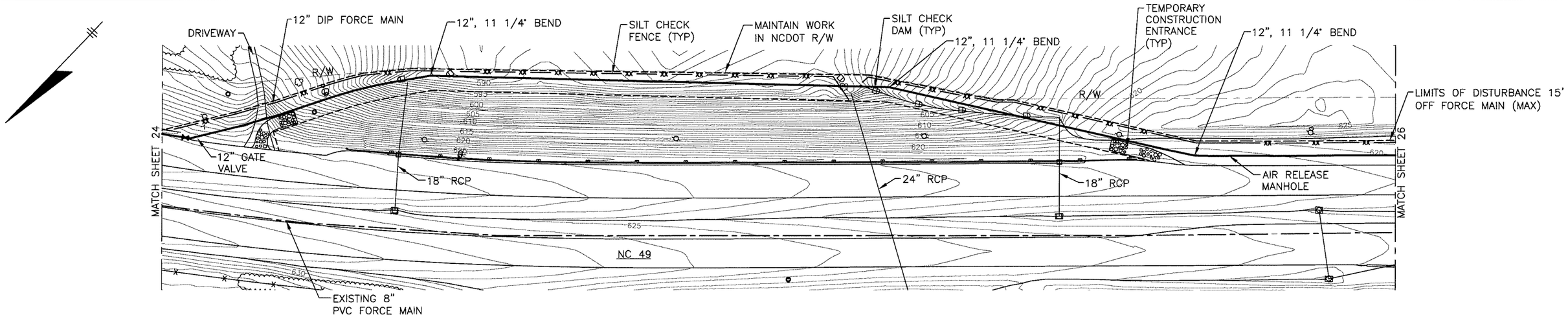

PLAN

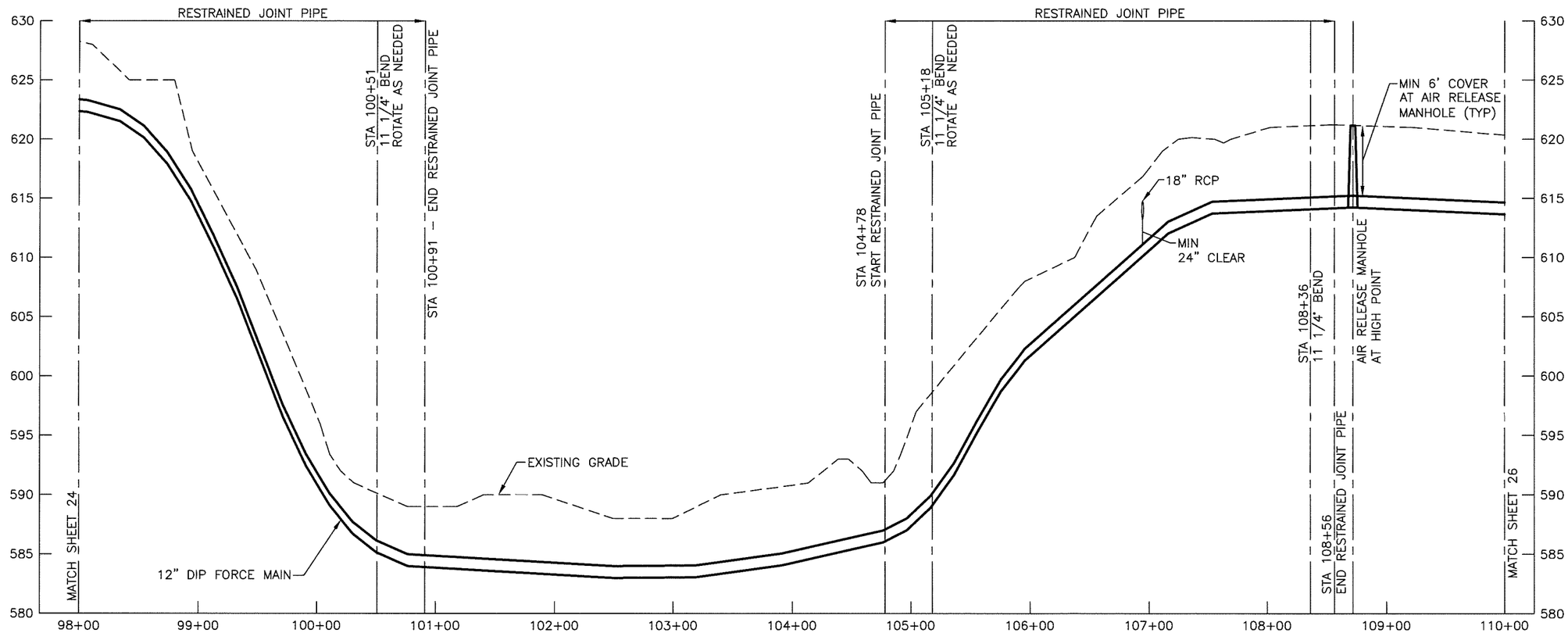

PROFILE

IN CHARGE CAWjr DESIGNED CAWjr MADE BY AMA CHECKED GJW	V 5' 0 5' 10' H 50' 0 50' 100'	RECORD DRAWING TO THE BEST OF OUR KNOWLEDGE AND BELIEF THIS RECORD DRAWING SUBSTANTIALLY REPRESENTS THE PROJECT AS CONSTRUCTED	willis ENGINEERS	WATER AND SEWER AUTHORITY OF CABARRUS COUNTY **WASTEWATER FACILITIES**	MT. PLEASANT NORTHWEST SEWER EXTENSION **FORCE MAIN PLAN AND PROFILE**	1968.005 25REC.DWG SEPTEMBER 2011	25

WILLIS ENGINEERS, 10700 SIKES PLACE, CHARLOTTE, NORTH CAROLINA, 28277 – NC LIC. NO. F-0114

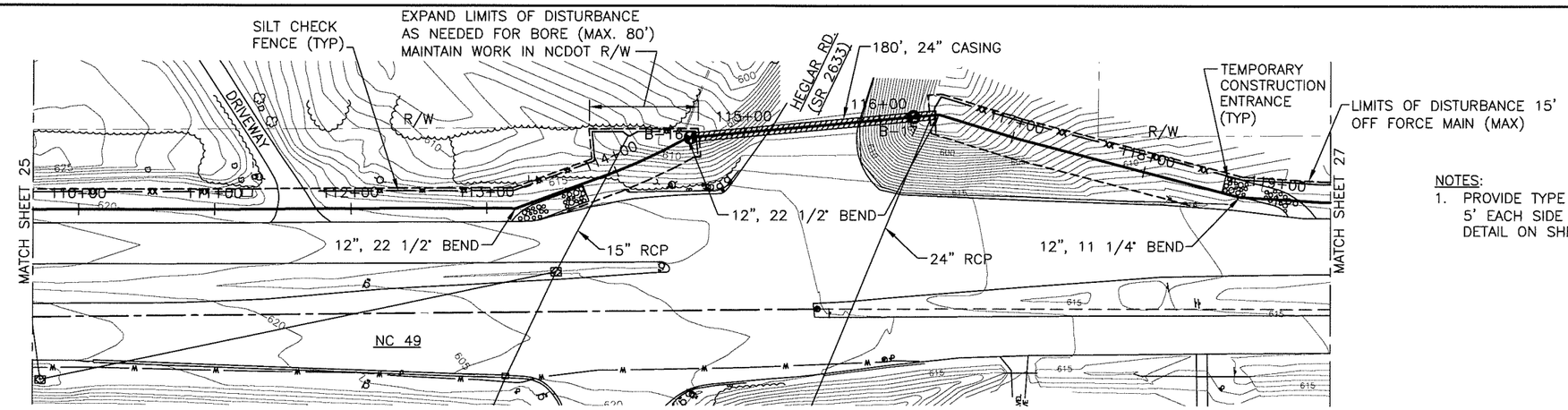

NOTES:
1. PROVIDE TYPE "D" BEDDING FOR 5' EACH SIDE OF 15" RCP. SEE DETAIL ON SHEET 37.

PLAN

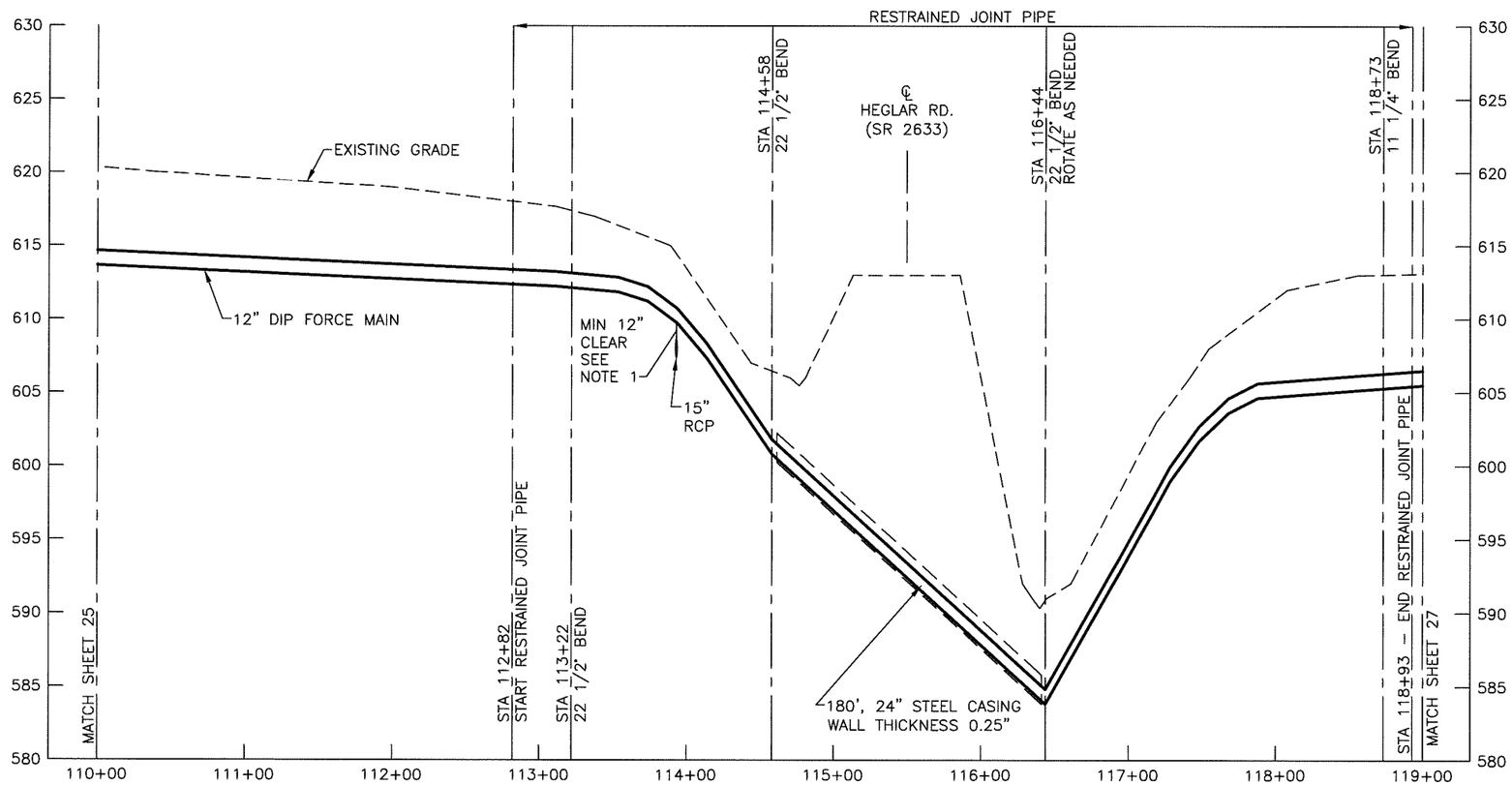

PROFILE

WILLIS ENGINEERS, 10700 SIKES PLACE, CHARLOTTE, NORTH CAROLINA, 28277 – NC LIC. NO. F-0114

NORTH CAROLINA PROFESSIONAL SEAL 24494 ENGINEER GREGORY J. WELLS

02 SEPT 11

IN CHARGE CAWjr DESIGNED CAWjr MADE BY AMA CHECKED GJW	V 5' 0 5' 10' H 50' 0 50' 100'	RECORD DRAWING TO THE BEST OF OUR KNOWLEDGE AND BELIEF THIS RECORD DRAWING SUBSTANTIALLY REPRESENTS THE PROJECT AS CONSTRUCTED	willis ENGINEERS	WATER AND SEWER AUTHORITY OF CABARRUS COUNTY WASTEWATER FACILITIES	MT. PLEASANT NORTHWEST SEWER EXTENSION FORCE MAIN PLAN AND PROFILE	1968.005 26REC.DWG SEPTEMBER 2011	26

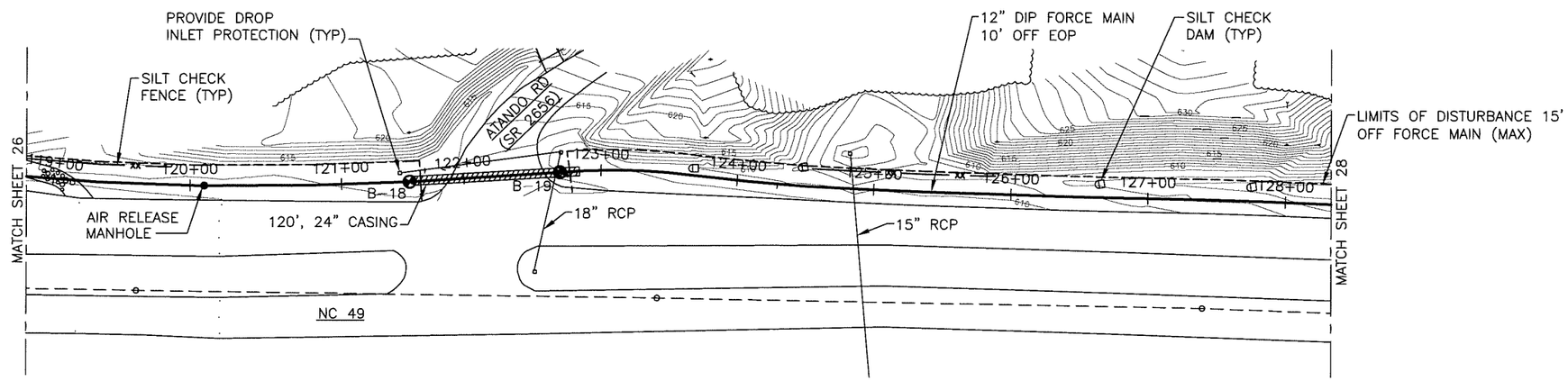

PLAN

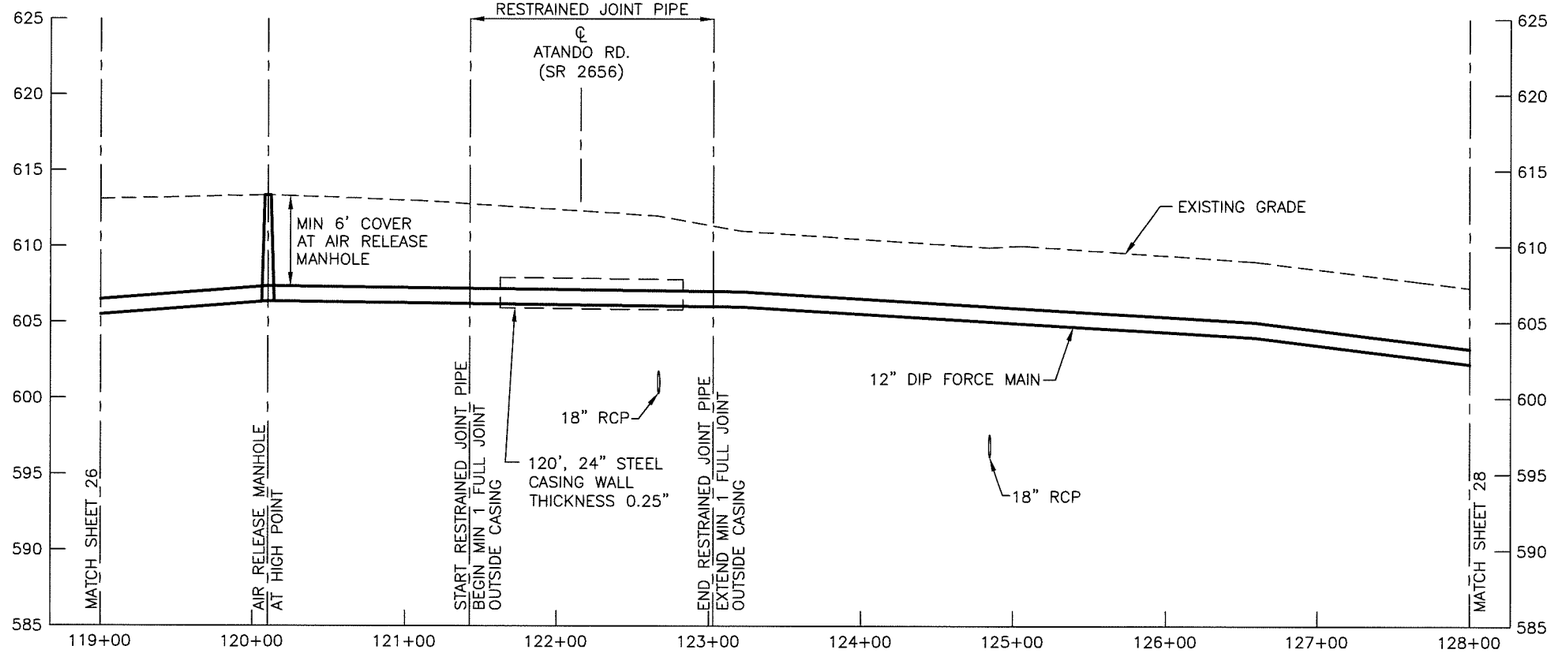

PROFILE

WILLIS ENGINEERS, 10700 SIKES PLACE, CHARLOTTE, NORTH CAROLINA, 28277 – NC LIC. NO. F-0114

NORTH CAROLINA PROFESSIONAL SEAL 24494 ENGINEER GREGORY J. WELLS

02 SEPT 11

IN CHARGE CAWjr DESIGNED CAWjr MADE BY AMA CHECKED GJW	V 5' 0 5' 10' H 50' 0 50' 100'	RECORD DRAWING TO THE BEST OF OUR KNOWLEDGE AND BELIEF THIS RECORD DRAWING SUBSTANTIALLY REPRESENTS THE PROJECT AS CONSTRUCTED	willis ENGINEERS	WATER AND SEWER AUTHORITY OF CABARRUS COUNTY WASTEWATER FACILITIES	MT. PLEASANT NORTHWEST SEWER EXTENSION FORCE MAIN PLAN AND PROFILE	1968.005 27REC.DWG SEPTEMBER 2011	27

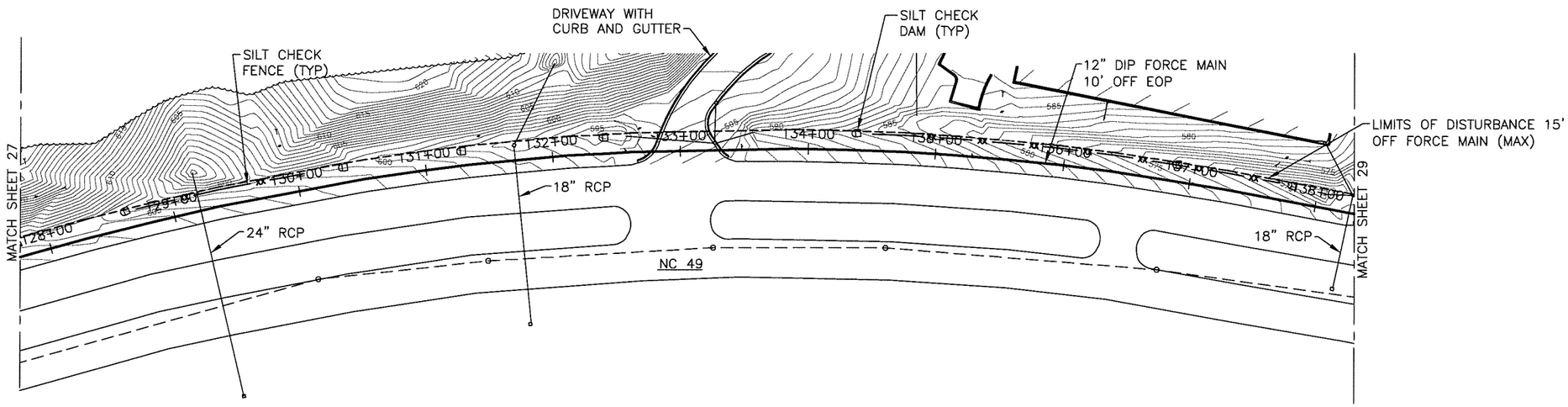

PLAN

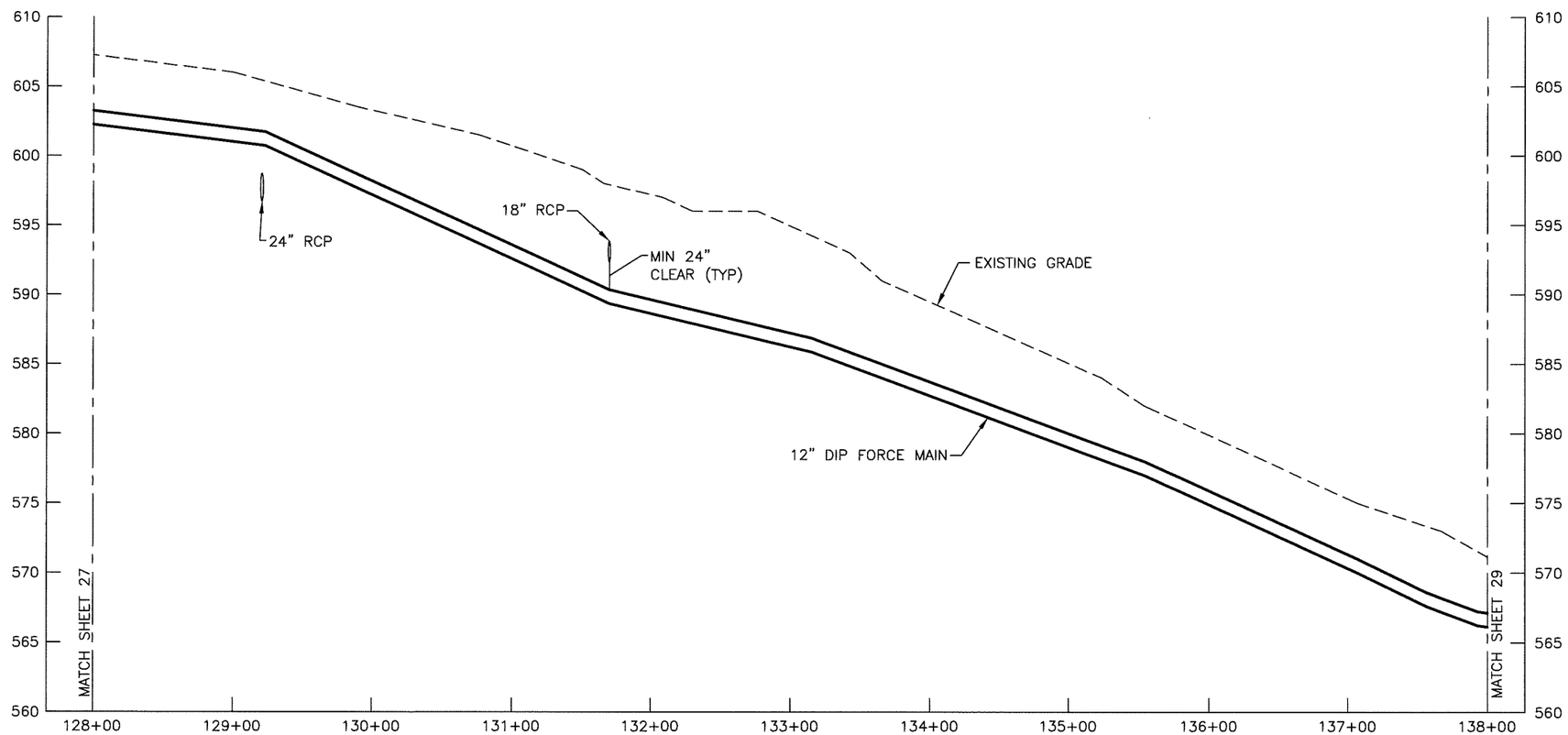

PROFILE

WILLIS ENGINEERS, 10700 SIKES PLACE, CHARLOTTE, NORTH CAROLINA, 28277 – NC LIC. NO. F-0114

NORTH CAROLINA PROFESSIONAL SEAL 24494 ENGINEER GREGORY J. WELLS

02 SEPT 11

IN CHARGE CAWjr DESIGNED CAWjr MADE BY AMA CHECKED GJW	V 5' 0 5' 10' H 50' 0 50' 100'	RECORD DRAWING TO THE BEST OF OUR KNOWLEDGE AND BELIEF THIS RECORD DRAWING SUBSTANTIALLY REPRESENTS THE PROJECT AS CONSTRUCTED	willis ENGINEERS	WATER AND SEWER AUTHORITY OF CABARRUS COUNTY WASTEWATER FACILITIES	MT. PLEASANT NORTHWEST SEWER EXTENSION FORCE MAIN PLAN AND PROFILE	1968.005 28REC.DWG SEPTEMBER 2011	28

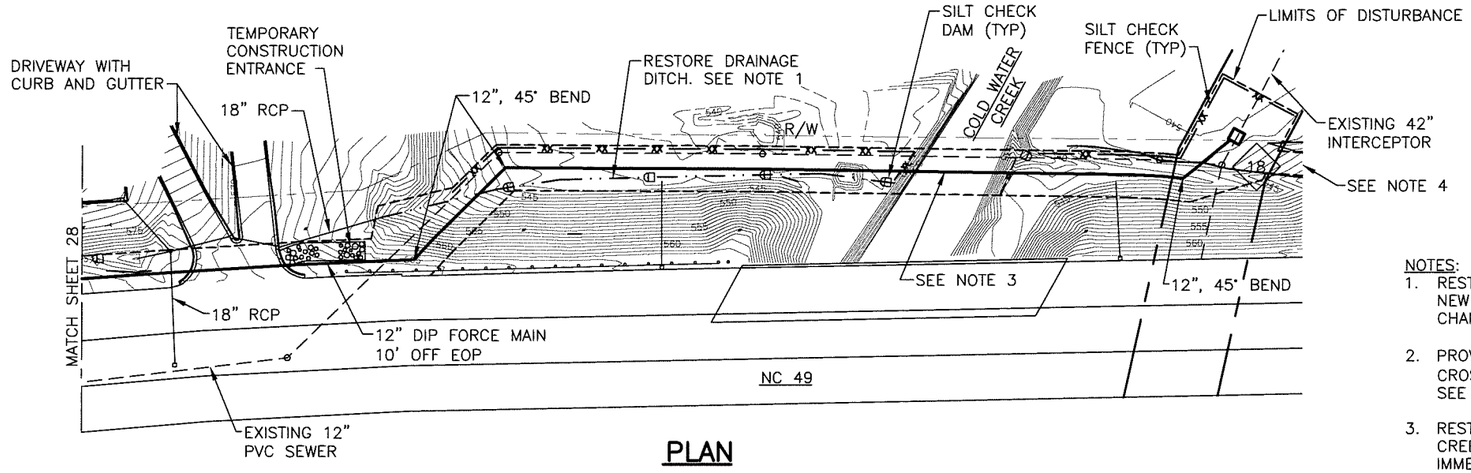

PLAN

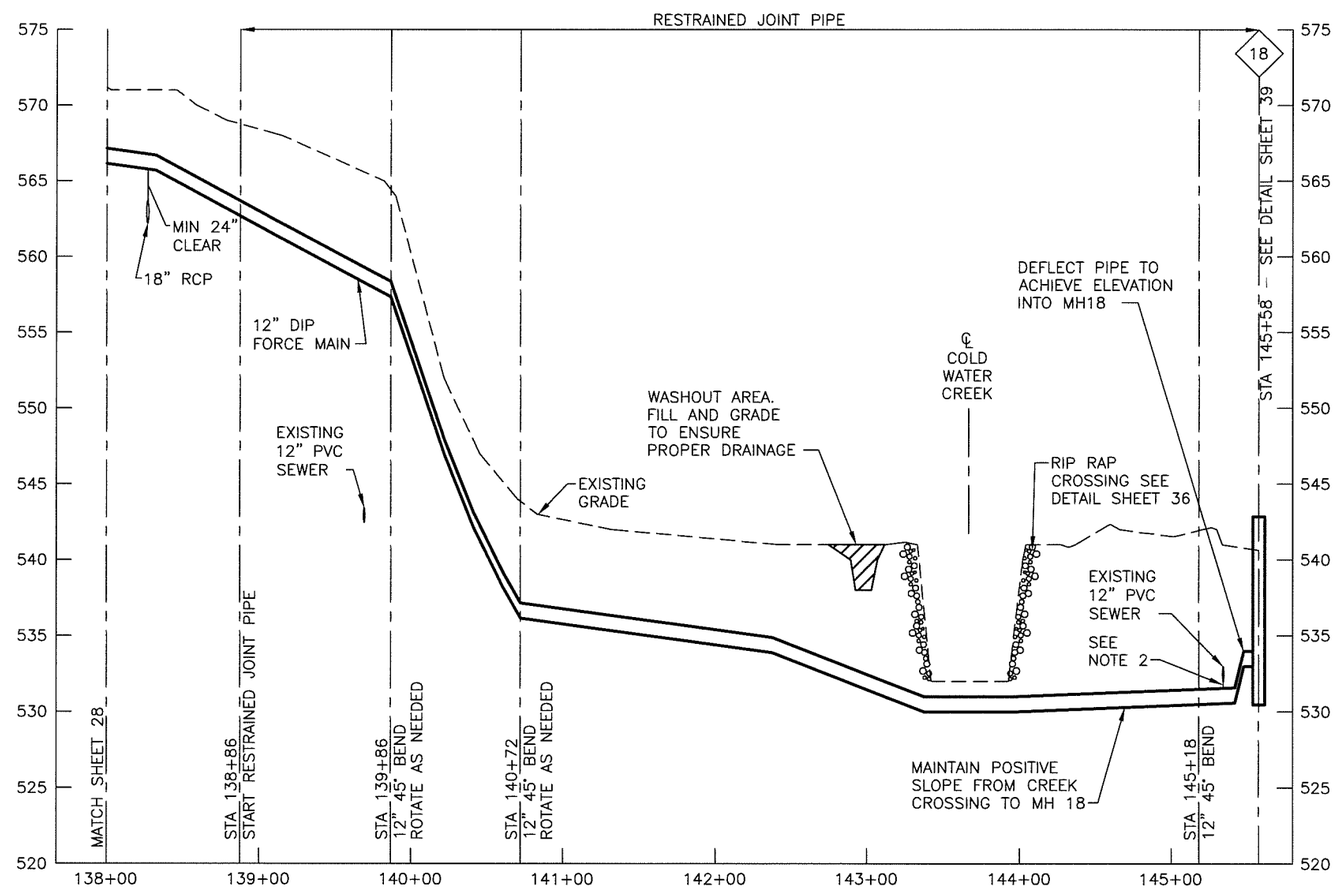

PROFILE

NOTES:

1. RESTORE EXISTING DRAINAGE DITCH WITH NEW V–SHAPED RIP RAP LINED CHANNEL. SEE DETAIL ON SHEET 36.
2. PROVIDE TYPE "C" BEDDING AT CROSSING OF EXISTING 12" PVC SEWER. SEE SHEET 37 FOR DETAIL.
3. RESTORE AND RESEED ALONG THE CREEK AND INSTALL SILT FENCE IMMEDIATELY AFTER PIPE INSTALLATION.
4. TEMPORARY CONSTRUCTION ACCESS PROVIDED APPROX. 500' UP NC 49. CONTRACTOR SHALL PROVIDE SILT FENCE ALONG ON DOWNSTREAM SIDE OF ACCESS OR OTHER APPROPRIATE EROSION CONTROL MEASURES. LIMITS OF DISTURBANCE LIMITED TO 20' ALONG ACCESS. PROVIDE TEMPORARY CONSTRUCTION ENTRANCE AT NC 49.

WILLIS ENGINEERS, 10700 SIKES PLACE, CHARLOTTE, NORTH CAROLINA, 28277 – NC LIC. NO. F-0114

NORTH CAROLINA PROFESSIONAL SEAL 24494 ENGINEER GREGORY J. WELLS

02 SEPT 11

IN CHARGE CAWjr DESIGNED CAWjr MADE BY AMA CHECKED GJW	V 5' 0 5' 10' H 50' 0 50' 100'	RECORD DRAWING TO THE BEST OF OUR KNOWLEDGE AND BELIEF THIS RECORD DRAWING SUBSTANTIALLY REPRESENTS THE PROJECT AS CONSTRUCTED	willis ENGINEERS	WATER AND SEWER AUTHORITY OF CABARRUS COUNTY WASTEWATER FACILITIES	MT. PLEASANT NORTHWEST SEWER EXTENSION FORCE MAIN PLAN AND PROFILE	1968.005 29REC.DWG SEPTEMBER 2011	29

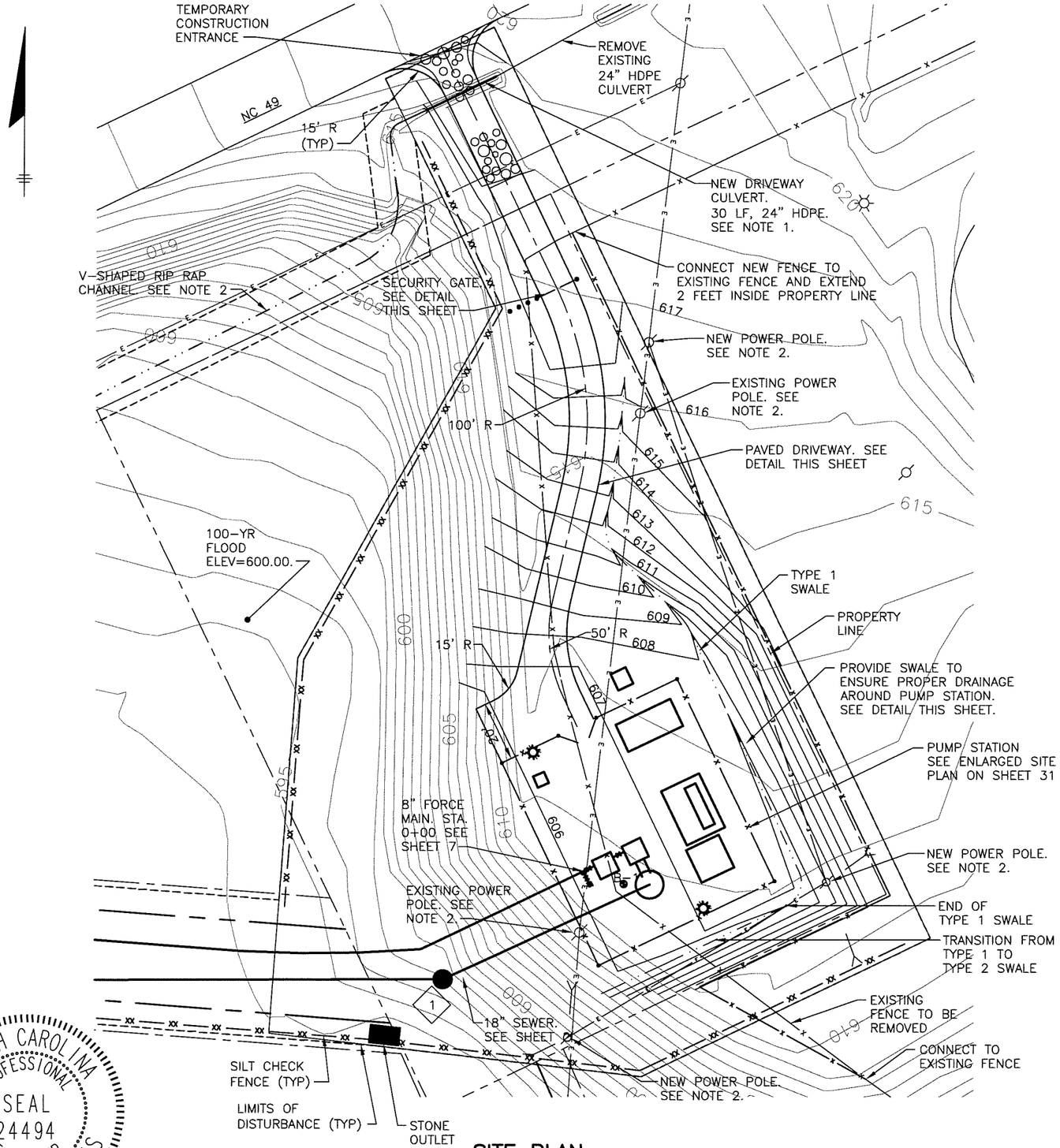

SITE PLAN

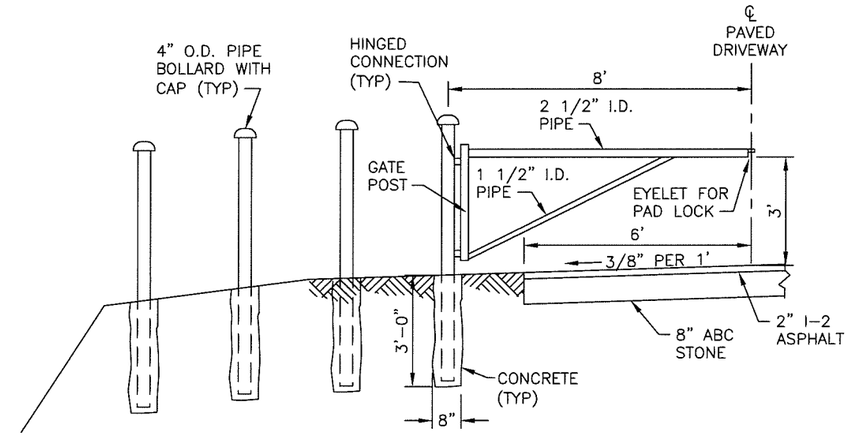

NOTES:
1. VIEW SHOWN IS THE WEST SIDE OF THE PAVED DRIVEWAY.
2. PIPE SIZES FOR GATE SHOWN ARE THE MINIMUM SIZES PERMITTED.
3. PROVIDE GATE STOPS AND HOLDBACKS ANCHORED IN CONCRETE.
4. ALL COMPONENTS FOR THE GATE SHALL BE HOT-DIPPED GALVANIZED.

SECURITY GATE AND PAVED DRIVEWAY DETAIL

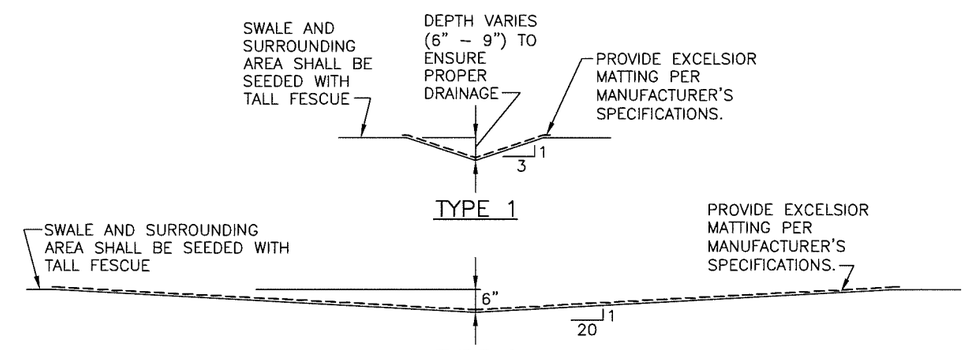

SWALE DETAIL

NOTES:
1. INSTALL DRIVEWAY CULVERT IN EXISTING DITCH AND RE-ESTABLISH DITCH ON DOWNSTREAM SIDE WITH V-SHAPED RIP RAP LINED CHANNEL. SEE SHEET 2 FOR ALIGNMENT OF CHANNEL AND SHEET 36 FOR DETAIL.
2. EXISTING OVERHEAD POWER SERVICE AND POWER POLES TO BE RELOCATED BY OTHERS. CONTRACTOR SHALL COORDINATE WORK WITH POWER UTILITY.
3. CENTERLINE OF THE PAVED DRIVEWAY AND THE FENCE CORNERS WILL BE STAKED PRIOR TO CONSTRUCTION.

NORTH CAROLINA PROFESSIONAL SEAL 24494 ENGINEER GREGORY J. WELLS
02 SEPT 11

IN CHARGE CAWjr DESIGNED CAWjr MADE BY AMA CHECKED GJW	20' 0 20' 40'	RECORD DRAWING TO THE BEST OF OUR KNOWLEDGE AND BELIEF THIS RECORD DRAWING SUBSTANTIALLY REPRESENTS THE PROJECT AS CONSTRUCTED	willis ENGINEERS	WATER AND SEWER AUTHORITY OF CABARRUS COUNTY WASTEWATER FACILITIES	MT. PLEASANT NORTHWEST SEWER EXTENSION PUMP STATION SITE PLAN	1968.005 30REC.DWG SEPTEMBER 2011	30

WILLIS ENGINEERS, 10700 SIKES PLACE, CHARLOTTE, NORTH CAROLINA, 28277 - NC LIC. NO. F-0114

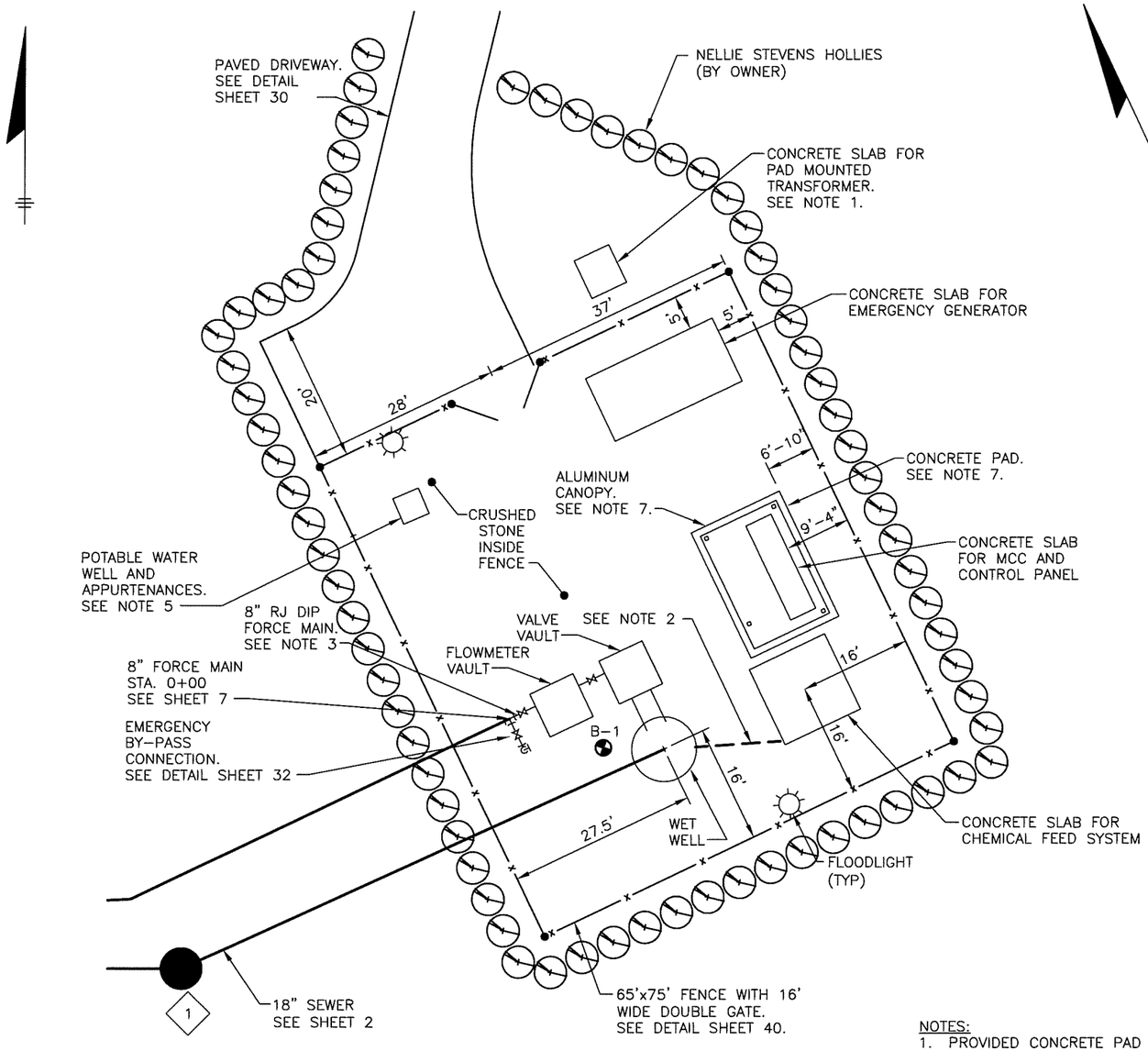

ENLARGED SITE PLAN

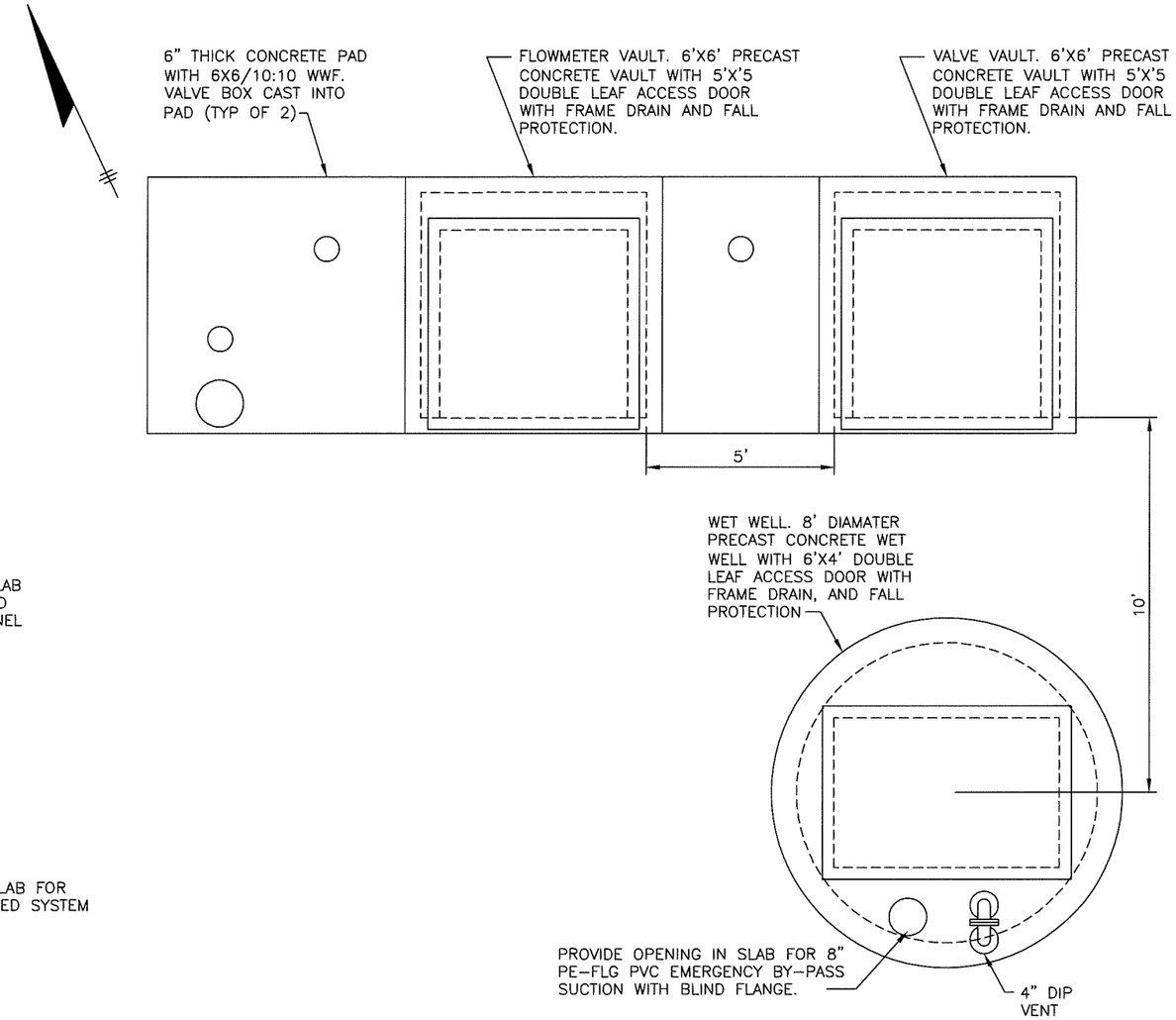

PLAN AT FINISHED GRADE

NOTES:

1. PROVIDED CONCRETE PAD FOR PAD MOUNTED TRANSFORMER BY LOCAL UTILITY PROVIDER. COORDINATE LOCATION.
2. PROVIDE 1" SCH 80 PVC CONDUIT FROM CHEMICAL FEED SYSTEM TO WET WELL WITH. CONDUIT SHALL BE SLOPED TOWARD WET WELL.
3. 8" FORCE MAIN SHALL MAINTAIN A POSITIVE SLOPE FROM STA. 0+00 TO THE VALVE VAULT.
4. PROVIDE MIN. 8" ABC STONE INSIDE FENCE. SLOPE AWAY FROM STRUCTURES.
5. CONTRACTOR SHALL PROVIDE A 10 GPM CAPACITY WELL AND A HYDRO-PNEUMATIC TANK ENCLOSED IN A HEATED, INSULATED FIBERGLASS ENCLOSURE ON A 6" THICK CONCRETE PAD. PIPING SHALL BE CONNECTED TO A 3/4" FREEZE PROOF YARD HYDRANT LOCATED ADJACENT TO THE WELL.
6. PROVIDE A MINIMUM 14'X20'X6" CONCRETE PAD WITH 6X6/10:10 WWF AROUND THE ELECTRICAL CONCRETE SLAB. TOP OF SLAB SHALL BE 4" ABOVE TOP OF SURROUNDING PAD. PROVIDE 1/2" BITUMINOUS FIBER EXPANSION JOINT BETWEEN SLAB AND PAD.
7. PROVIDE A MINIMUM 12'X18' PRE-ENGINEERED, PRE-FINISHED ALUMINUM CANOPY OVER THE ELECTRICAL EQUIPMENT.

NORTH CAROLINA PROFESSIONAL SEAL 24494 ENGINEER GREGORY J. WELLS

02 SEPT 11

IN CHARGE CAWjr DESIGNED CAWjr MADE BY AMA CHECKED GJW	10' 0 10' 20' 2' 0 2' 4'	RECORD DRAWING TO THE BEST OF OUR KNOWLEDGE AND BELIEF THIS RECORD DRAWING SUBSTANTIALLY REPRESENTS THE PROJECT AS CONSTRUCTED	willis ENGINEERS	WATER AND SEWER AUTHORITY OF CABARRUS COUNTY WASTEWATER FACILITIES	MT. PLEASANT NORTHWEST SEWER EXTENSION PUMP STATION PLANS	1968.005 31REC.DWG SEPTEMBER 2011	31

WILLIS ENGINEERS, 10700 SIKES PLACE, CHARLOTTE, NORTH CAROLINA, 28277 - NC LIC. NO. F-0114

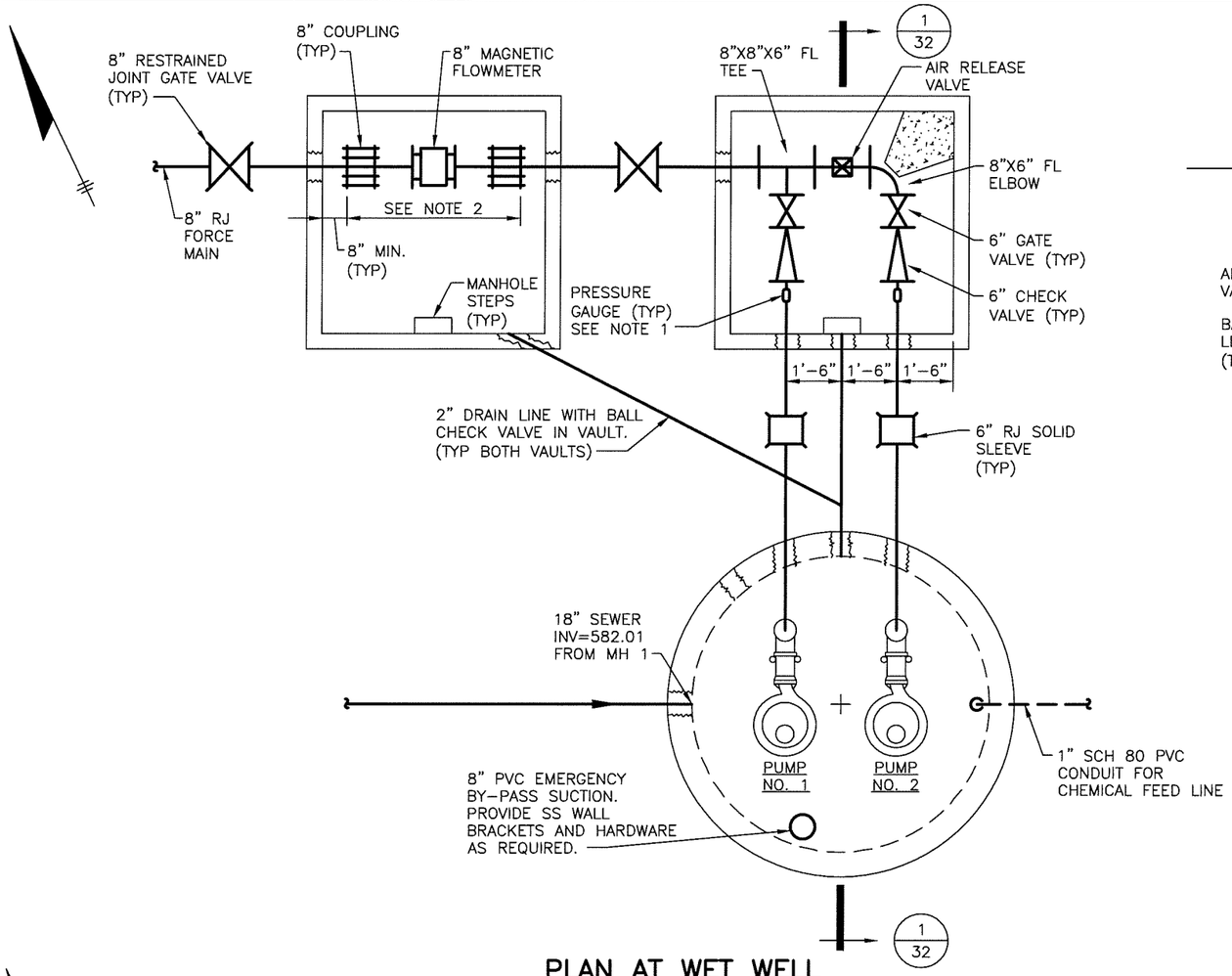

PLAN AT WET WELL

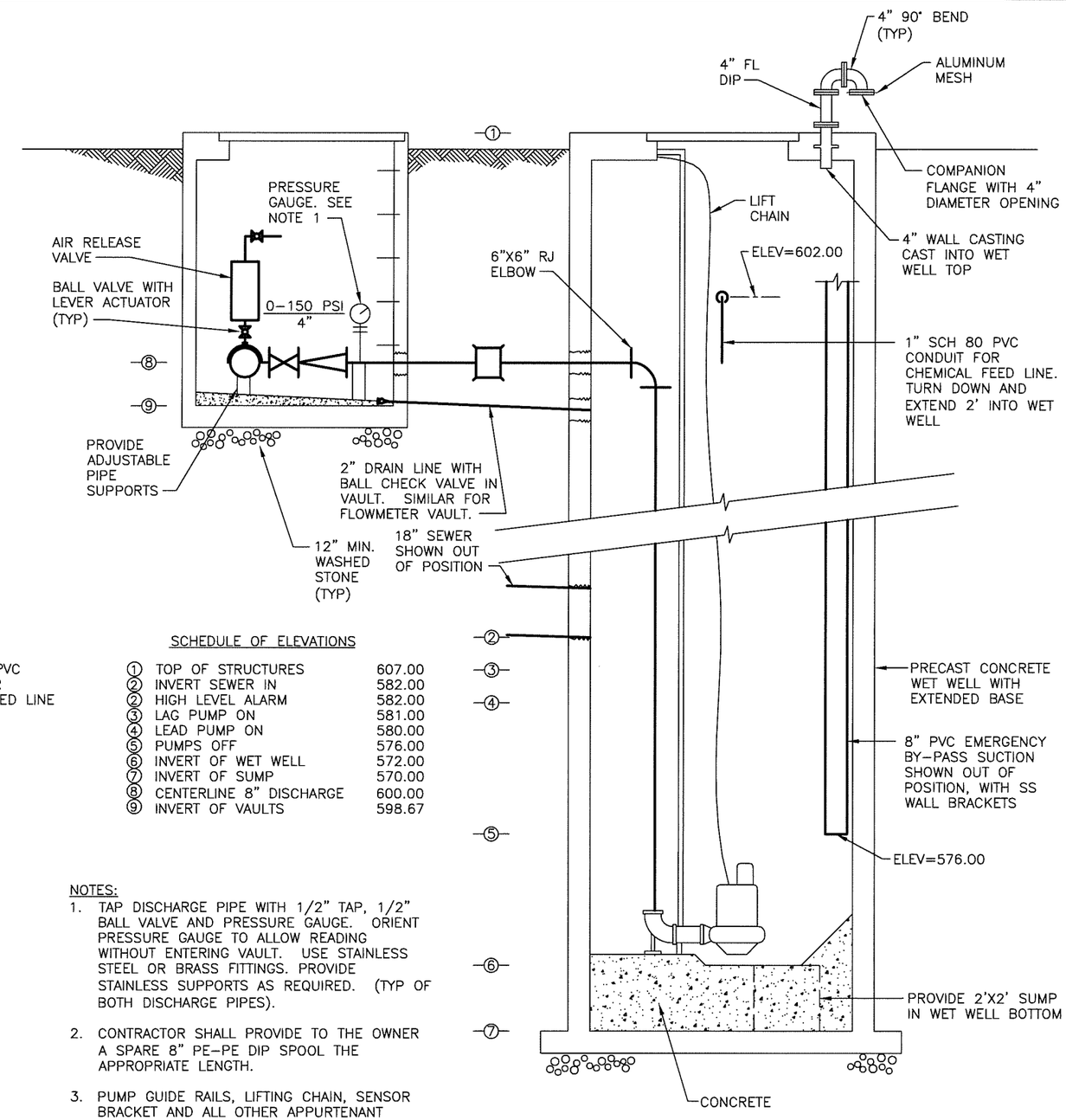

SCHEDULE OF ELEVATIONS

①	TOP OF STRUCTURES	607.00
②	INVERT SEWER IN	582.00
②	HIGH LEVEL ALARM	582.00
③	LAG PUMP ON	581.00
④	LEAD PUMP ON	580.00
⑤	PUMPS OFF	576.00
⑥	INVERT OF WET WELL	572.00
⑦	INVERT OF SUMP	570.00
⑧	CENTERLINE 8" DISCHARGE	600.00
⑨	INVERT OF VAULTS	598.67

NOTES:

1. TAP DISCHARGE PIPE WITH 1/2" TAP, 1/2" BALL VALVE AND PRESSURE GAUGE. ORIENT PRESSURE GAUGE TO ALLOW READING WITHOUT ENTERING VAULT. USE STAINLESS STEEL OR BRASS FITTINGS. PROVIDE STAINLESS SUPPORTS AS REQUIRED. (TYP OF BOTH DISCHARGE PIPES).
2. CONTRACTOR SHALL PROVIDE TO THE OWNER A SPARE 8" PE-PE DIP SPOOL THE APPROPRIATE LENGTH.
3. PUMP GUIDE RAILS, LIFTING CHAIN, SENSOR BRACKET AND ALL OTHER APPURTENANT HARDWARE SHALL BE STAINLESS STEEL.
4. ALL PIPING FOR THE AIR RELEASE VALVE SHALL BE STAINLESS STEEL WITH STAINLESS STEEL OR BRASS FITTINGS AND VALVES.

SECTION 1/32

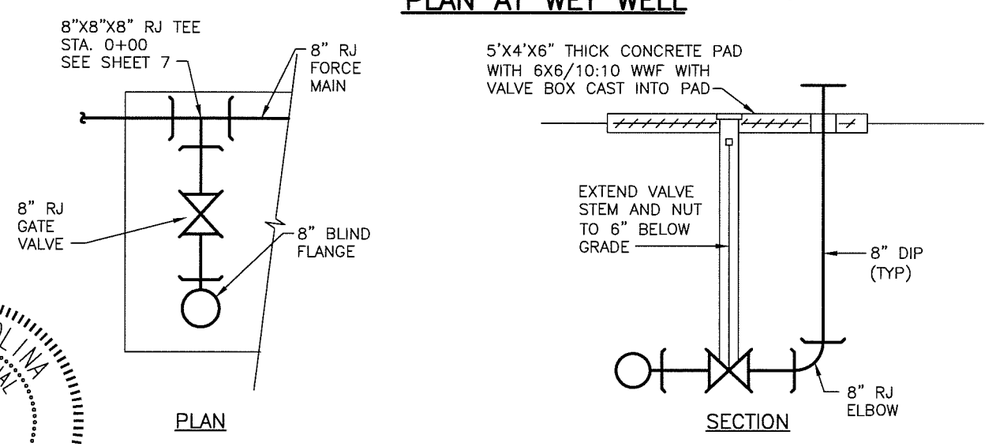

EMERGENCY BY-PASS CONNECTION

NORTH CAROLINA PROFESSIONAL SEAL 24494 ENGINEER GREGORY J. WELLS

02 SEPT 11

IN CHARGE CAWjr DESIGNED CAWjr MADE BY AMA CHECKED GJW	2' 0 2' 4'	RECORD DRAWING TO THE BEST OF OUR KNOWLEDGE AND BELIEF THIS RECORD DRAWING SUBSTANTIALLY REPRESENTS THE PROJECT AS CONSTRUCTED	willis ENGINEERS	WATER AND SEWER AUTHORITY OF CABARRUS COUNTY WASTEWATER FACILITIES	MT. PLEASANT NORTHWEST SEWER EXTENSION PUMP STATION DETAILS	1968.005 32REC.DWG SEPTEMBER 2011	32

WILLIS ENGINEERS, 10700 SIKES PLACE, CHARLOTTE, NORTH CAROLINA, 28277 - NC LIC. NO. F-0114

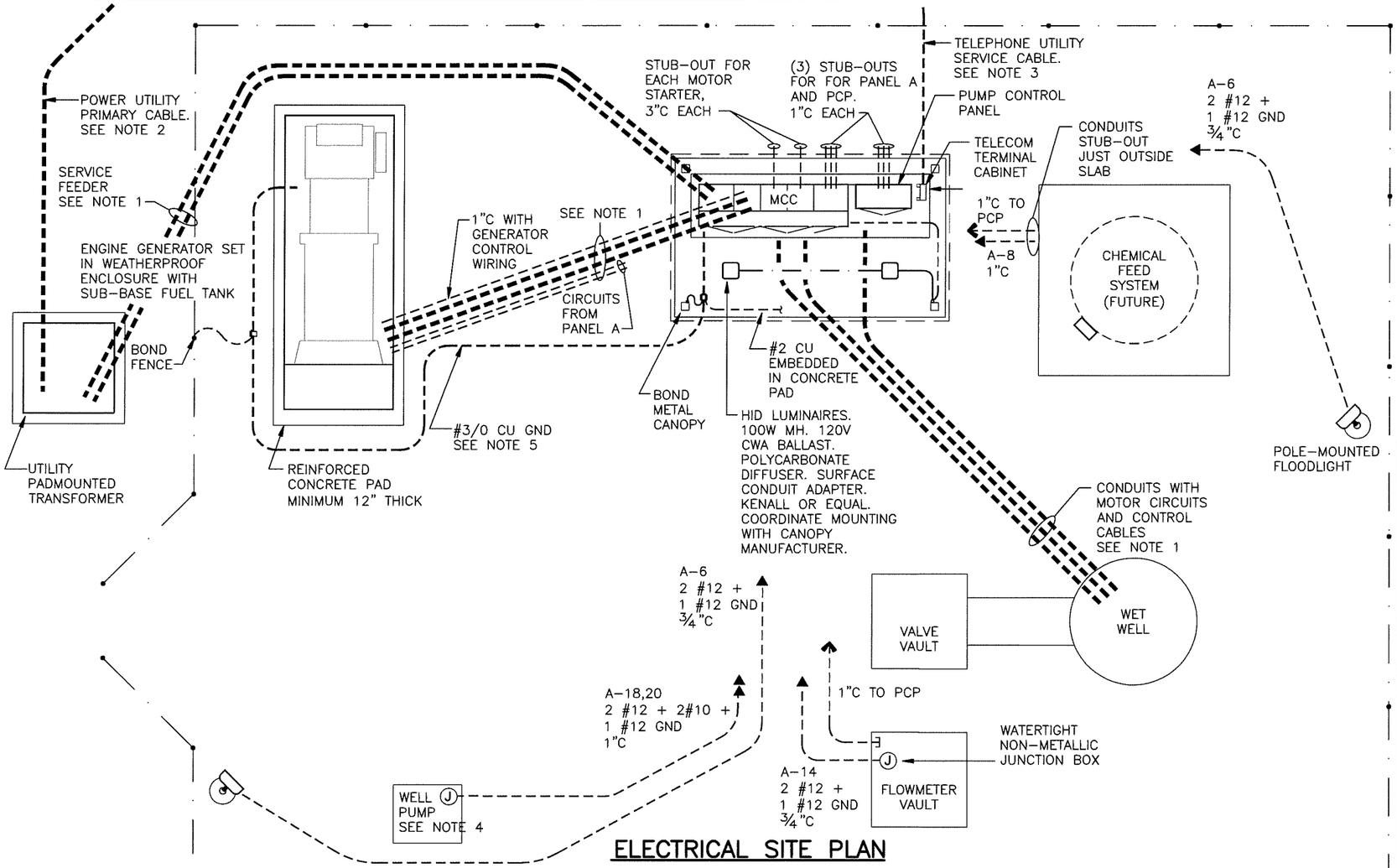

ELECTRICAL SITE PLAN

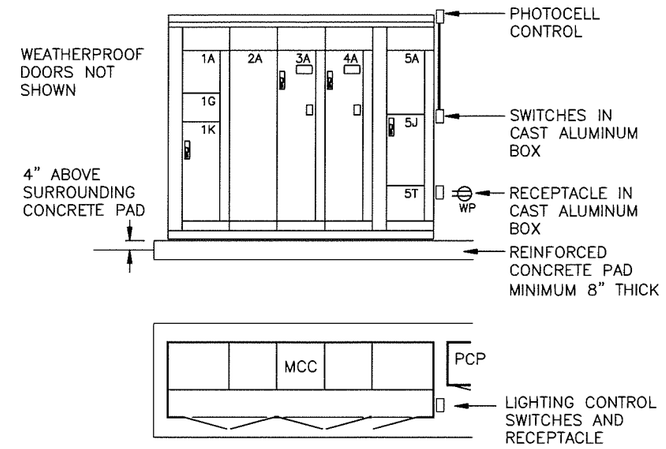

MCC – DETAILS

MOTOR CONTROL CENTER MCC

MOTOR CONTROL CENTER SHALL BE SQUARE D MODEL 6 OR APPROVED EQUAL, FOR 480V 3 PHASE 3 WIRE OPERATION. BUSSES SHALL BE OF TIN-PLATED COPPER, RATED NOT LESS THAN 300A (VERTICAL) AND 600A (HORIZONTAL), BRACED FOR FAULT CURRENT OF 65,000A RMS SYM. WIRING SHALL BE NEMA CLASS 1, TYPE B. ALL UNITS SHALL BE RATED MINIMUM 65,000 AIC. COORDINATE WITH SUPPLIERS OF PROCESS EQUIPMENT AND WITH SYSTEMS INTEGRATOR FOR CONTROL INTERFACES.
ENCLOSURE SHALL BE FREE-STANDING NEMA 3R NON-WALK-IN TYPE.
UL LABEL FOR SERVICE ENTRANCE USE.

UNIT	LOAD SERVED	DEVICE DESCRIPTION
1A	METERING	POWER METER WITH LCD
1G	SURGE SUPPRESSION	TVSS WITH CIRCUIT BREAKER DISCONNECT. 240 KA PER PHASE SURGE CAPACITY. EVENT COUNTER DIISPLAY.
1K	MAIN BREAKER	400A 3P 480V CIRCUIT BREAKER. 65 KAIC. ELECTRONIC TRIP. SQUARE D LX FRAME OR EQUAL.
2A	AUTOMATIC TRANSFER SWITCH	400A AUTOMATIC TRANSFER SWITCH. 3-POLE TRANSFER. FOR 480V 3-PHASE 3-WIRE OPERATION, WITH A GROUNDED WYE 480V/277V UTILITY SOURCE.
3A	PUMP 1 – 75HP	COMBINATION SOFT-START CONTROLLER AND CIRCUIT BREAKER DISCONNECT. CONTROLLER RATED FOR SEVERE-DUTY APPLICATION. MINIMUM 124A @ 480V. ISOLATION CONTACTOR AND NEMA RATED BYPASS CONTACTOR WITH FULL-VOLTAGE STARTING CAPABILITY.
4A	PUMP 2 – 75HP	COMBINATION SOFT-START CONTROLLER AND THERMAL-MAGNETIC CIRCUIT BREAKER DISCONNECT. SAME AS ABOVE.
5A	PANEL A	120/240V 1-PHASE 3-WIRE BRANCH CIRCUIT PANELBOARD. SEE SCHEDULE.
5J	TRANSFORMER	10 KVA DRY-TYPE TRANSFORMER, WITH PRIMARY CIRCUIT BREAKER. 480V TO 120/240V 1-PHASE. TO SERVE PANEL A.
5T	EQUIPPED SPACE	EQUIPPED SPACE TO PERMIT FUTURE ADDITION OF STANDARD MCC PLUG-IN UNIT.

REFERENCE NOTES

1. ROUTE CONDUITS MINIMUM 24" BELOW GRADE. USE SPACERS TO MAINTAIN 4" CLEAR BETWEEN CONDUITS. ENCASE IN CONCRETE, WITH MINIMUM 4" COVER ON ALL SIDES. PROVIDE MARKER TAPE, 8 TO 10 INCHES BELOW GRADE. TAPE SHALL BE OF BRIGHTLY COLORED 4 MIL PLASTIC, 6" WIDE, SUITABLE FOR DIRECT BURIAL.
2. COORDINATE WITH POWER UTILITY FOR INSTALLATION OF PRIMARY CABLE. PROVIDE CONDUIT SLEEVES UNDER PAVED AREAS IF REQUIRED.
3. PROVIDE 2"C SCH 80 PVC FOR TELEPHONE UTILITY CABLE. COORDINATE WITH UTILITY REPRESENTATIVE PRIOR TO ANY INSTALLATION.
4. PROVIDE CIRCUITS TO CAST ALUMINUM JUNCTION BOX IN WELL PUMP HOUSING. PROVIDE 30A SP MOTOR-RATED TOGGLE SWITCH AS DISCONNECT FOR PUMP. PROVIDE GFI RECEPTACLE, WITH FEED-THRU PROTECTION FOR HEATER.
5. PROVIDE GROUNDING ELECTRODE CONDUCTOR. #3/0 BARE COPPER DIRECT-BURIED 36" BELOW FINISHED GRADE. CONDUCTOR SHALL BE RUN WITHOUT SPLICE FROM GROUND BUS IN MCC TO NEUTRAL BONDING POINT OF GENERATOR OUTPUT.

KVA LOAD	LOAD SERVED	WIRE SIZE	BRKR AMPS	CKT NO.	CKT NO.	BRKR AMPS	WIRE SIZE	LOAD SERVED	KVA LOAD
	SPARE		20	1	2	20	12	MCC LIGHT & RECEPT (G)	.8
	SPARE		20	3	4	20	12	MCC HEATERS (G)	1.2
.4	GENSET RECEPT	12	20	5	6	20	12	FLOODLIGHTS	.6
.4	BATTERY CHARGER	12	20	7	8	20	12	CHEMICAL TANK	.6
1.0	ENGINE HEATER	10	20	9	10	20	12	PUMP CONTROL PANEL	.6
1.0				11	12	20	12	AIR COMPRESSOR	1.1
	SPACE ONLY			13	14	20	12	FLOWMETER VAULT	.2
	SPACE ONLY			15	16	20		SPARE	
	SPACE ONLY			17	18	20	12	WELL PUMP HOUSING	1.0
	SPACE ONLY			19	20	30	10	WELL PUMP	1.5
	MAIN BREAKER		60						

SQUARE D TYPE NQOD
LOCATED IN MCC
120/240V 1 PHASE 3 WIRE
10,000 AIC FULLY RATED

NEUTRAL BUS | GROUND BAR

(G) = GFCI CIRCUIT BREAKER

PANEL A

NORTH CAROLINA PROFESSIONAL SEAL 24494 ENGINEER GREGORY J. WELLS
02 SEPT 11

IN CHARGE CAWjr DESIGNED WLE MADE BY AMA CHECKED GJW	NO SCALE	RECORD DRAWING TO THE BEST OF OUR KNOWLEDGE AND BELIEF THIS RECORD DRAWING SUBSTANTIALLY REPRESENTS THE PROJECT AS CONSTRUCTED	willis ENGINEERS	WATER AND SEWER AUTHORITY OF CABARRUS COUNTY WASTEWATER FACILITIES	MT. PLEASANT NORTHWEST SEWER EXTENSION PUMP STATION ELECTRICAL 1968.005 33REC.DWG SEPTEMBER 2011	33

WILLIS ENGINEERS, 10700 SIKES PLACE, CHARLOTTE, NORTH CAROLINA, 28277 – NC LIC. NO. F-0114

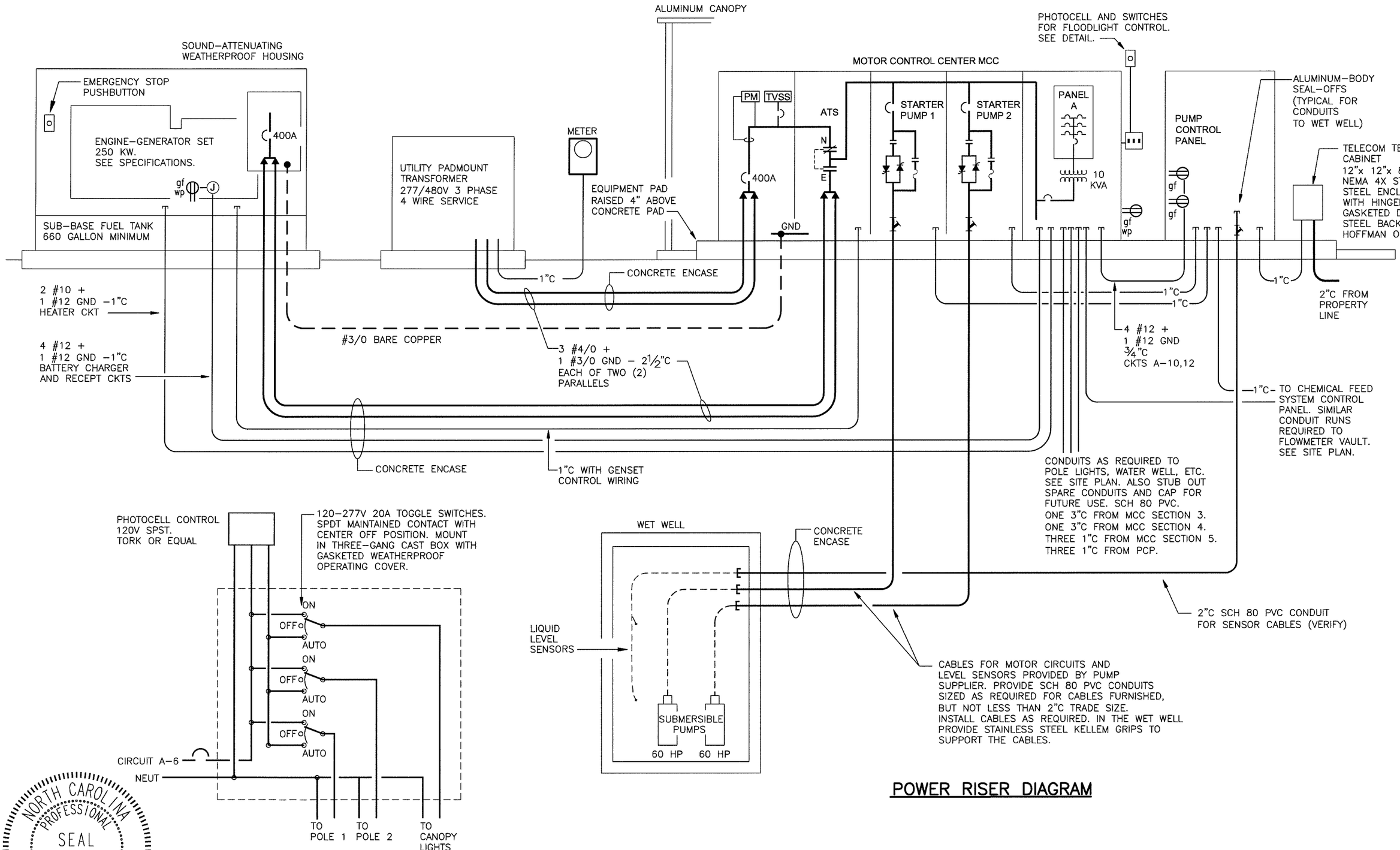

LIGHTING CONTROL

POWER RISER DIAGRAM

WILLIS ENGINEERS, 10700 SIKES PLACE, CHARLOTTE, NORTH CAROLINA, 28277 – NC LIC. NO. F–0114

NORTH CAROLINA PROFESSIONAL SEAL 24494 ENGINEER GREGORY J. WELLS

02 SEPT 11

IN CHARGE CAWjr DESIGNED WLE MADE BY AMA CHECKED GJW	NO SCALE	RECORD DRAWING TO THE BEST OF OUR KNOWLEDGE AND BELIEF THIS RECORD DRAWING SUBSTANTIALLY REPRESENTS THE PROJECT AS CONSTRUCTED	willis ENGINEERS	WATER AND SEWER AUTHORITY OF CABARRUS COUNTY WASTEWATER FACILITIES	MT. PLEASANT NORTHWEST SEWER EXTENSION PUMP STATION ELECTRICAL	1968.005 34REC.DWG SEPTEMBER 2011	34

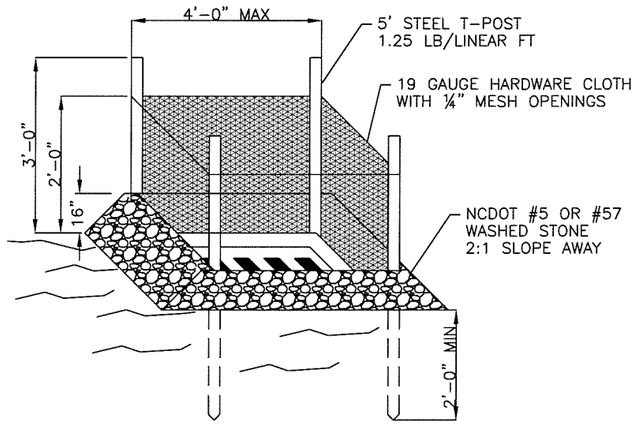

DROP INLET PROTECTION

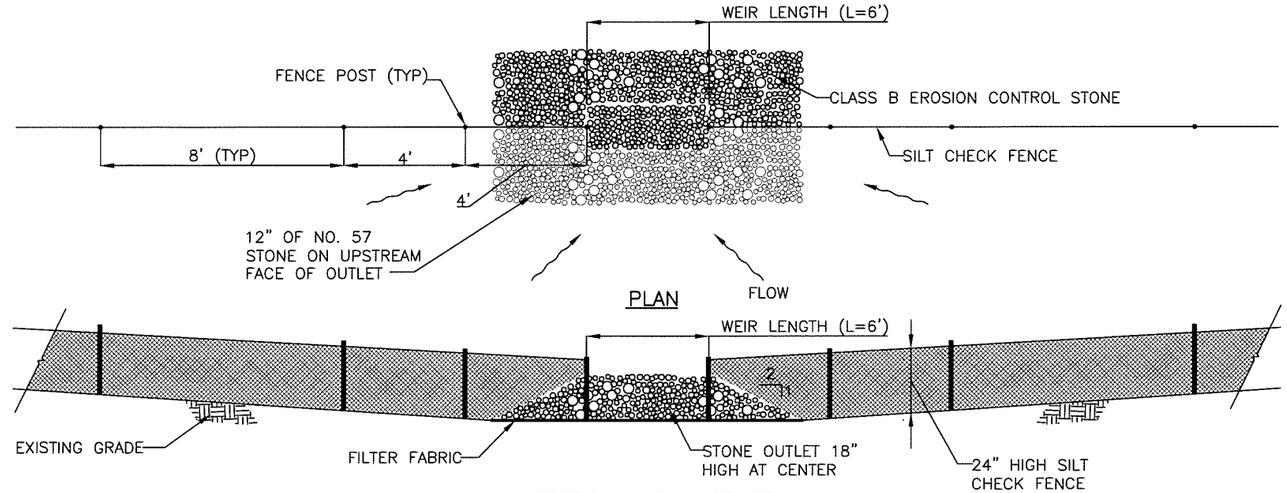

SECTION ALONG FENCE

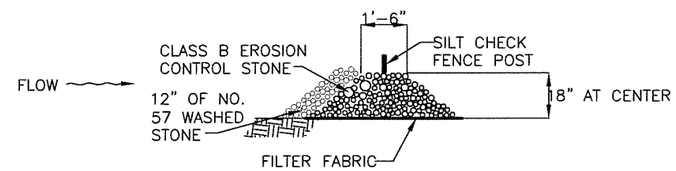

SECTION THROUGH STONE OUTLET

STONE OUTLET DETAIL

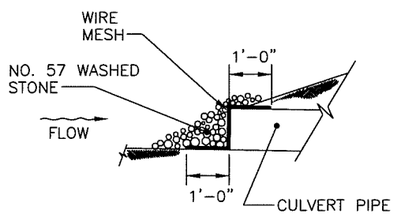

STONE INLET PROTECTION

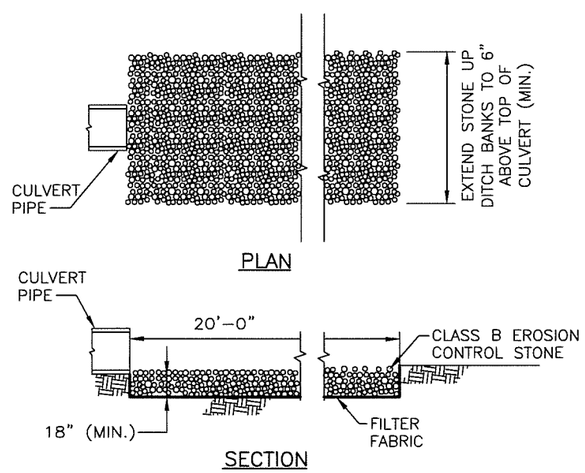

OUTLET PROTECTION

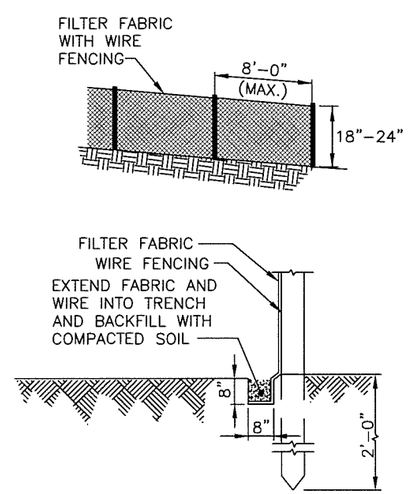

SILT CHECK FENCE

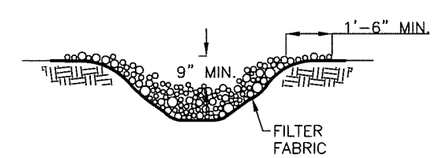

CROSS SECTION

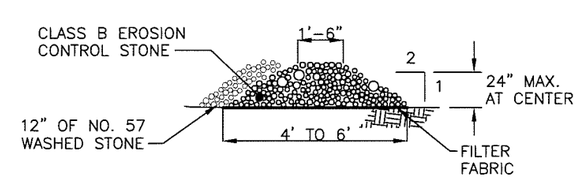

SECTION AT CENTER LINE

SILT CHECK DAM

NORTH CAROLINA PROFESSIONAL SEAL 24494 ENGINEER GREGORY J. WELLS

02 SEPT 11

IN CHARGE CAWjr DESIGNED CAWjr MADE BY AMA CHECKED GJW	NO SCALE	RECORD DRAWING TO THE BEST OF OUR KNOWLEDGE AND BELIEF THIS RECORD DRAWING SUBSTANTIALLY REPRESENTS THE PROJECT AS CONSTRUCTED	willis ENGINEERS	WATER AND SEWER AUTHORITY OF CABARRUS COUNTY WASTEWATER FACILITIES	MT. PLEASANT NORTHWEST SEWER EXTENSION EROSION CONTROL DETAILS	1968.005 35REC.DWG SEPTEMBER 2011	35

WILLIS ENGINEERS, 10700 SIKES PLACE, CHARLOTTE, NORTH CAROLINA, 28277 - NC LIC. NO. F-0114

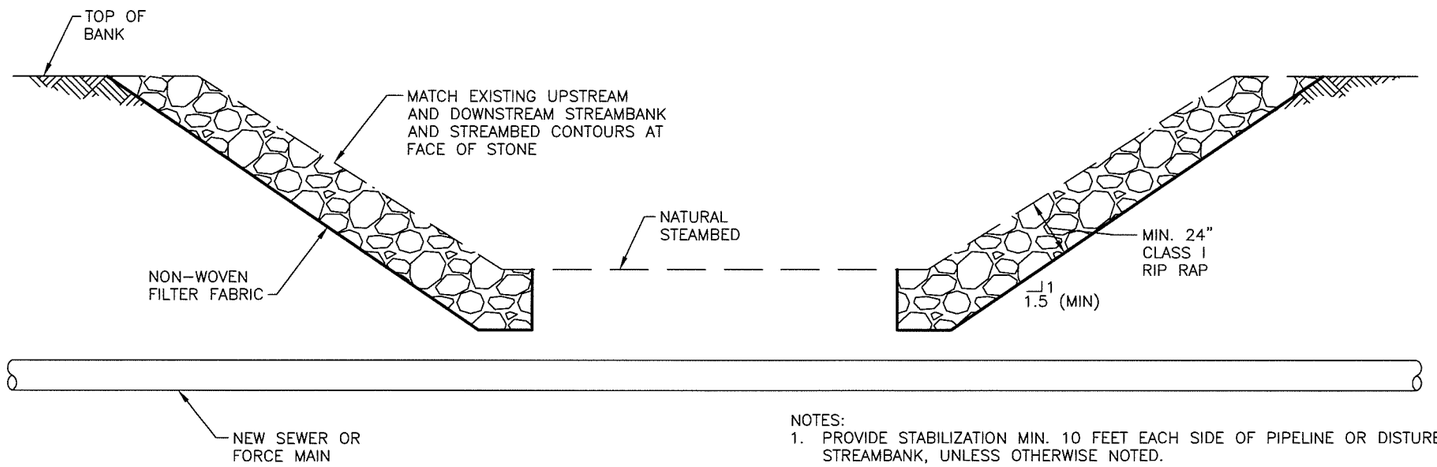

NOTES:
1. PROVIDE STABILIZATION MIN. 10 FEET EACH SIDE OF PIPELINE OR DISTURBED STREAMBANK, UNLESS OTHERWISE NOTED.
2. FOR ALL CROSSINGS AT STA. 8+75 AND STA. 41+00 ALONG SEWER ALIGNMENT, PROVIDE RIP RAP STABILIZATION 10 FEET EACH SIDE OF PIPELINE AND THEN PROVIDE STABILIZATION WITH COIR FIBER MATTING AND A WETLAND SEED MIX ON REMAINING DISTURBED STREAMBANK.

RIP RAP CROSSING

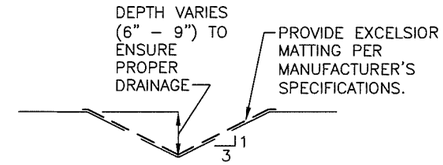

V-SHAPED GRASS LINED CHANNEL

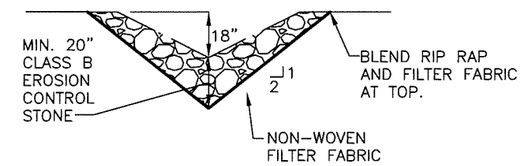

V-SHAPED RIP RAP LINED CHANNEL

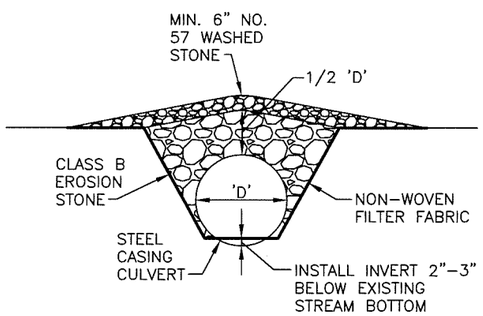

SECTION ACROSS STREAM/DITCH

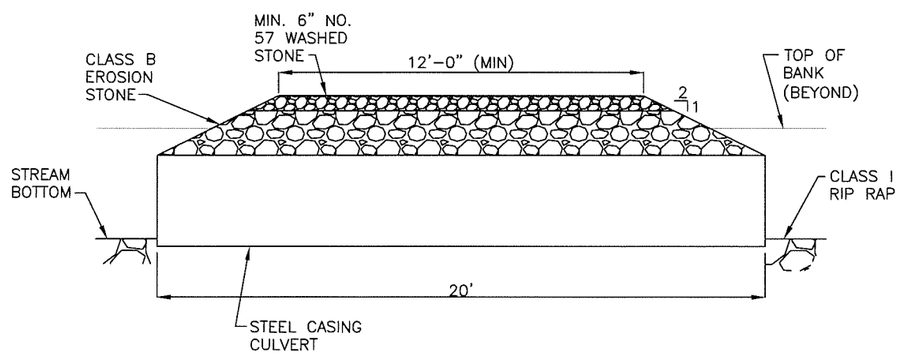

SECTION ALONG STREAM/DITCH

SEWER STA.	CULVERT 'D'
3+55	24"
8+75	36"
41+00	36"

NOTES:
1. RIP RAP BANK AND STREAM BED 5' UPSTREAM AND 15' DOWNSTREAM OF CULVERT.

TEMPORARY CROSSING

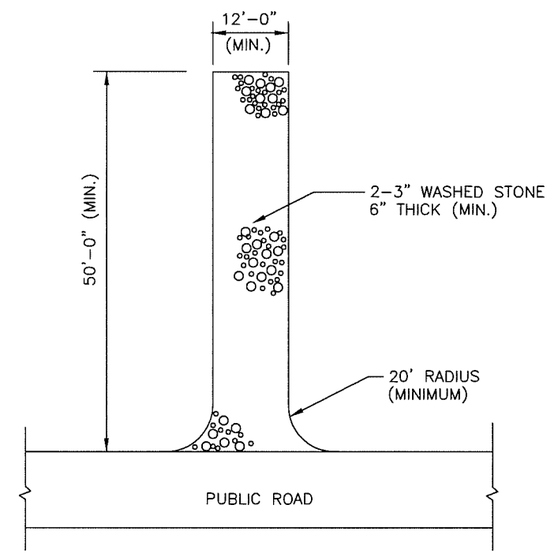

TEMPORARY CONSTRUCTION ENTRANCE

NORTH CAROLINA PROFESSIONAL SEAL 24494 ENGINEER GREGORY J. WELLS

02 SEPT 11

IN CHARGE CAWjr DESIGNED CAWjr MADE BY AMA CHECKED GJW	NO SCALE	RECORD DRAWING TO THE BEST OF OUR KNOWLEDGE AND BELIEF THIS RECORD DRAWING SUBSTANTIALLY REPRESENTS THE PROJECT AS CONSTRUCTED	willis ENGINEERS	WATER AND SEWER AUTHORITY OF CABARRUS COUNTY WASTEWATER FACILITIES	MT. PLEASANT NORTHWEST SEWER EXTENSION EROSION CONTROL DETAILS	1968.005 36REC.DWG SEPTEMBER 2011	36

WILLIS ENGINEERS, 10700 SIKES PLACE, CHARLOTTE, NORTH CAROLINA, 28277 – NC LIC. NO. F-0114

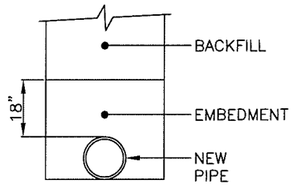

TYPE "A" BEDDING

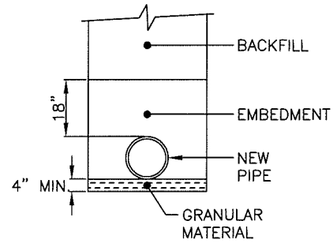

TYPE "B" BEDDING

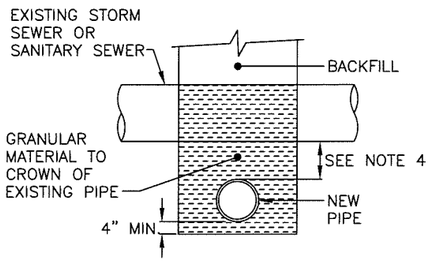

TYPE "C" BEDDING

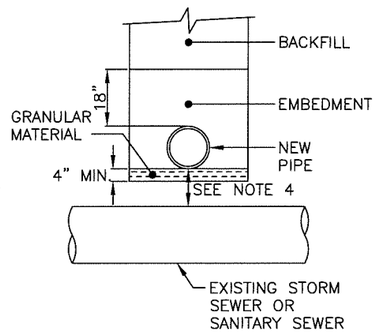

TYPE "D" BEDDING

LIMITING TRENCH DEPTH

PIPE MATERIAL	TYPE "A" BEDDING	TYPE "B" BEDDING
8" DIP	4'–10'	10'–35'
12" DIP	4'–10'	10'–35'
16" DIP	4'–10'	10'–30'
18" DIP	4'–10'	10'–30'

NOTES:
1. TRENCH DEPTHS MEASURED FROM FINISHED GRADE TO PIPE INVERT.
2. PIPE EMBEDMENT SHALL BE PLACED IN A MINIMUM OF 6" LAYERS AND COMPACTED TO 95% OF THE MAXIMUM LABORATORY DRY DENSITY AS DETERMINED BY THE STANDARD PROCTOR METHOD.
3. PIPE EMBEDMENT SHALL EXTEND TO FINISHED GRADE FOR PIPELINES WITHIN ROAD RIGHT–OF–WAY.
4. BEDDING TYPES "C" AND "D" SHALL BE PROVIDED WHERE SHOWN ON THE PLANS OR WHERE THE CLEARANCE WITH EXISTING STORM SEWER IS LESS THAN 24". THE BEDDING SHALL EXTEND A MINIMUM OF 5 FEET ON EACH SIDE OF THE EXISTING PIPE CROSSING.
5. WHEN USING BEDDING TYPE "C" ANY SUBGRADE UNDER EXISTING STORM SEWER OR SANITARY SEWER SHALL BE BACKFILLED WITH GRANULAR MATERIAL COMPACTED TO 95% TO THE CROWN OF THE EXISTING PIPE.

BEDDING DETAILS

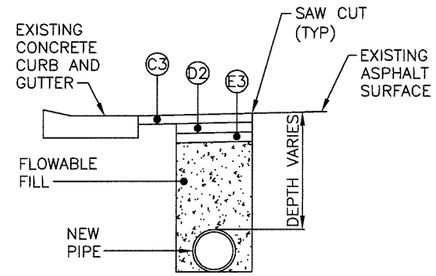

PAVEMENT SCHEDULE

- C3 — 3" ASPHALT SURFACE COURSE, TYPE S9.5C
- D2 — 4" ASPHALT INTERMEDIATE COURSE, TYPE I19.0C
- E3 — 3" ASPHALT BASE COURSE, TYPE B25.0C

NOTES:
1. DETAIL APPLICABLE FOR ALL WORK WITHIN NC 49 PAVEMENT OR WHERE SPECIFIED.
2. TRENCH SHALL BE BACKFILLED WITH FLOWABLE FILL AT THE END OF EACH WORK DAY.

NC 49 SECTION

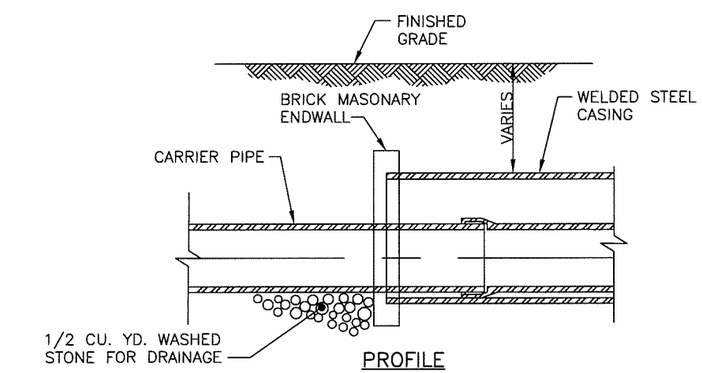

PROFILE

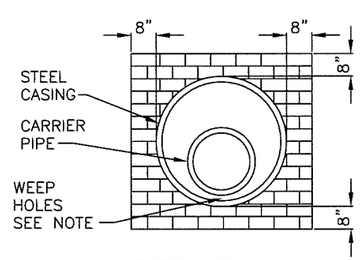

SECTION END WALL

CARRIER PIPE	CASING PIPE SIZE AND WALL THICKNESS
8"	20" X 0.250"
12"	24" X 0.250"
16"	36" X 0.375"
18"	36" X 0.375"

NOTE:
PROVIDE TWO 1" WEEP HOLE DRAINS EACH SIDE OF THE CARRIER PIPE IN DOWNHILL END WALL

CASING

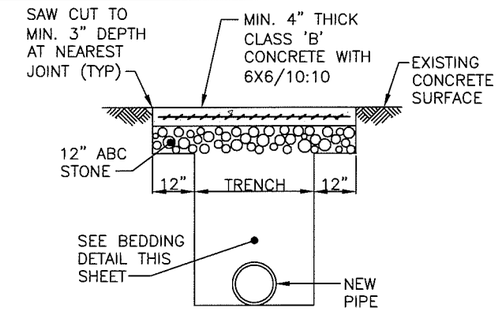

CONCRETE DRIVEWAY

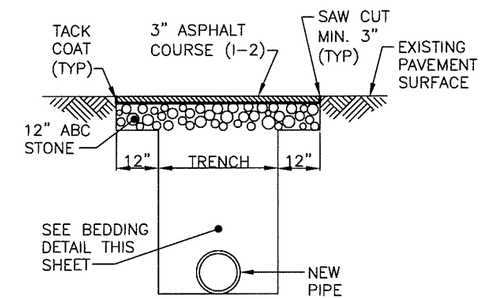

ASPHALT DRIVEWAY

NOTE:
DETAILS ABOVE ARE THE MINIMUM REQUIREMENTS FOR REPAIR. DRIVEWAYS SHOULD BE RESTORED EQUAL OR BETTER THAN THEIR ORIGINAL CONDITION

DRIVEWAY REPAIR

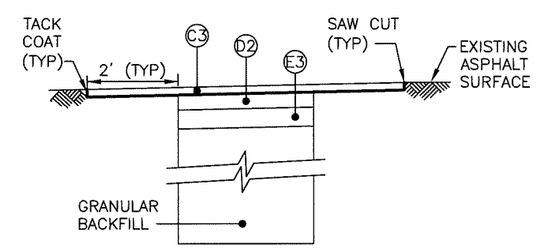

PAVEMENT SCHEDULE

- C3 — 2" ASPHALT SURFACE COURSE, TYPE S9.5C
- D2 — 4" ASPHALT INTERMEDIATE COURSE, TYPE I19.0C
- E3 — 5" ASPHALT BASE COURSE, TYPE B25.0C

NOTE:
1. GRANULAR BACKFILL SHALL BE PLACED IN A MINIMUM OF 6–INCH LAYERS COMPACTED TO 95% OF THE MAXIMUM LABORATORY DRY DENSITY AS DETERMINED BY THE STANDARD PROCTOR METHOD.

PAVEMENT RESTORATION

NORTH CAROLINA PROFESSIONAL SEAL 24494 ENGINEER GREGORY J. WELLS
02 SEPT 11

IN CHARGE CAWjr DESIGNED CAWjr MADE BY AMA CHECKED GJW	2' 0 2' 4'	RECORD DRAWING TO THE BEST OF OUR KNOWLEDGE AND BELIEF THIS RECORD DRAWING SUBSTANTIALLY REPRESENTS THE PROJECT AS CONSTRUCTED	willis ENGINEERS	WATER AND SEWER AUTHORITY OF CABARRUS COUNTY WASTEWATER FACILITIES	MT. PLEASANT NORTHWEST SEWER EXTENSION GENERAL DETAILS	1968.005 37REC.DWG SEPTEMBER 2011	37

WILLIS ENGINEERS, 10700 SIKES PLACE, CHARLOTTE, NORTH CAROLINA, 28277 – NC LIC. NO. F–0114

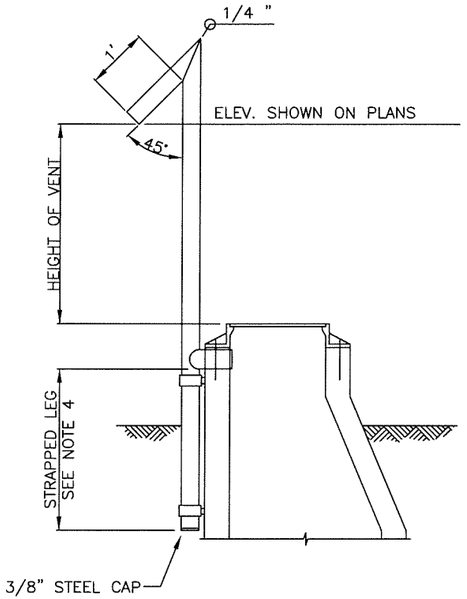

NOTES:
1. VENT PIPE SHALL BE IN ACCORDANCE WITH THE SECTION ON MATERIALS AND EQUIPMENT FOR SEWER MAINS OF THESE SPECIFICATIONS.
2. VENT TO POINT DOWNSTREAM.
3. TWO 3" X 3/8" STEEL STRAPS, AND 5/8" X 4" EXPANSION ANCHOR BOLTS SHALL BE USED TO SECURELY ANCHOR VENT.
4. THE FOLLOWING TABLE SHALL BE USED TO DETERMINE THE LENGTH OF THE STRAPPED LEG:

HEIGHT OF VENT PIPE	LENGTH OF STRAPPED LEG
UP TO 6.00'	3.00'
6.01' TO 8.00'	4.00'
8.01' TO 10.00'	5.00'
10.01' TO 12.00'	6.00'
OVER 12.01'	7.00'

VENTED MANHOLE

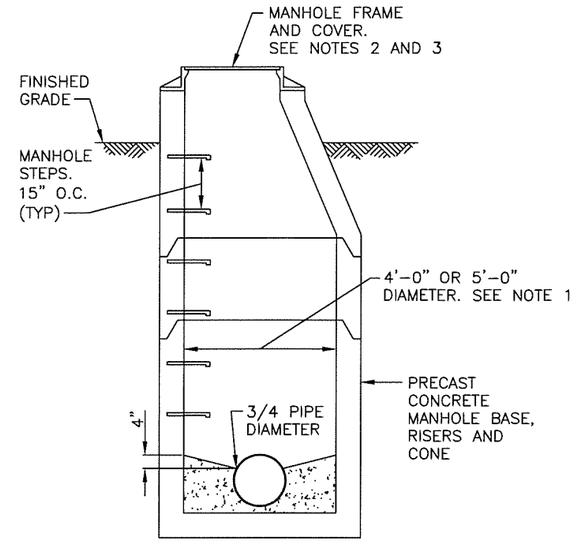

NOTES:
1. MANHOLES 1, 2, 3, AND 4 SHALL BE 5'-0" IN DIAMETER AND MANHOLES 5-17 SHALL BE 4'-0" IN DIAMETER.
2. ALL MANHOLE COVERS SHALL BE SEALED WITH (4) 2" X 1/2" DIA. STAINLESS STEEL BOLTS.
3. ALL MANHOLE FRAMES SHALL BE BOLTED TO CONE SECTION WITH 3/4" STAINLESS STEEL WEDGE ANCHOR BOLTS.

TYPICAL MANHOLE

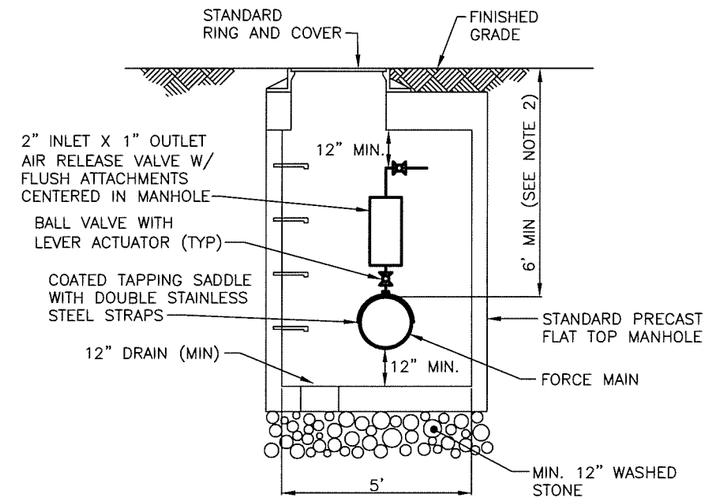

NOTES:
1. AIR RELEASE VALVE SHALL BE A CRISPIN UNIVERSAL SEWER AIR RELEASE VALVE OR A GA INDUSTIRES SINGLE BODY SEWAGE SERVICE COMBINATION AIR VALVE.
2. MINIMUM COVER OF NEW PIPE AT AIR RELEASE MANHOLE SHALL BE 6 FEET, UNLESS OTHERWISE NOTED ON THE PLANS. FOR MANHOLE NEAR STA. 85+15 (SHEET 23) A SHORT BODY VERSION OF THE AIR VALVE SPECIFIED ABOVE SHALL BE INSTALLED.
3. PIPING SHALL NOT OBSTRUCT ACCESS INTO AND OUT OF THE MANHOLE.
4. ALL PIPING SHALL BE STAINLESS STEEL WITH STAINLESS STEEL OR BRASS FITTINGS AND VALVES.

AIR RELEASE MANHOLE

WILLIS ENGINEERS, 10700 SIKES PLACE, CHARLOTTE, NORTH CAROLINA, 28277 - NC LIC. NO. F-0114

NORTH CAROLINA PROFESSIONAL SEAL 24494 ENGINEER GREGORY J. WELLS
02 SEPT 11

IN CHARGE CAWjr DESIGNED CAWjr MADE BY AMA CHECKED GJW	2' 0 2' 4'	RECORD DRAWING TO THE BEST OF OUR KNOWLEDGE AND BELIEF THIS RECORD DRAWING SUBSTANTIALLY REPRESENTS THE PROJECT AS CONSTRUCTED	willis ENGINEERS	WATER AND SEWER AUTHORITY OF CABARRUS COUNTY WASTEWATER FACILITIES	MT. PLEASANT NORTHWEST SEWER EXTENSION GENERAL DETAILS	1968.005 38REC.DWG SEPTEMBER 2011	38

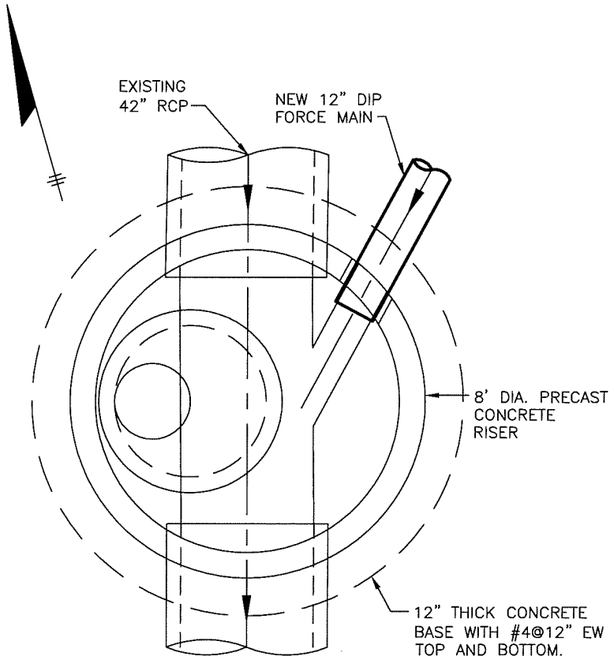

PLAN

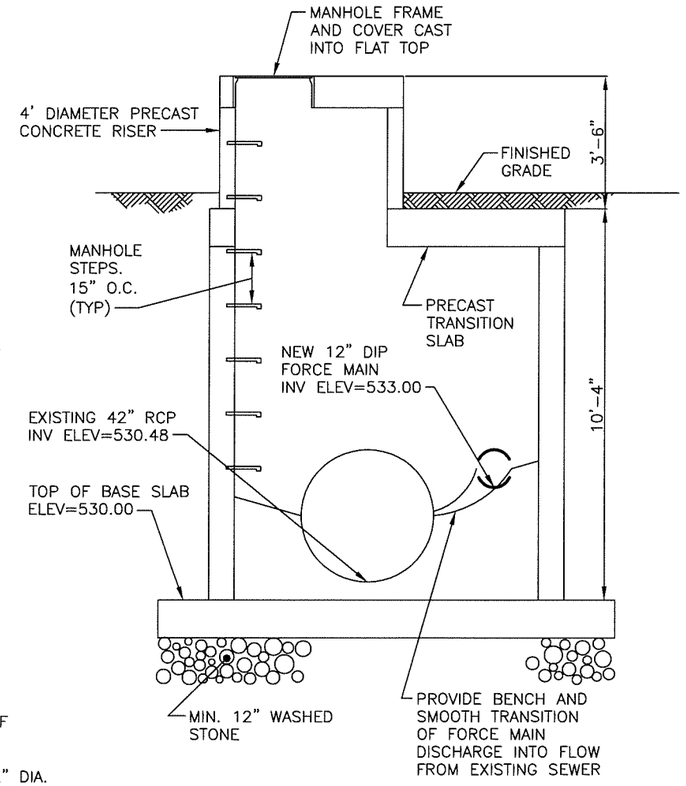

SECTION

NOTES:
1. CONTRACTOR SHALL VERIFY ELEVATION AND LOCATION OF EXISTING SEWER.
2. MANHOLE COVER SHALL BE SEALED WITH (4) 2" X 1/2" DIA. STAINLESS STEEL BOLTS.

MANHOLE 18

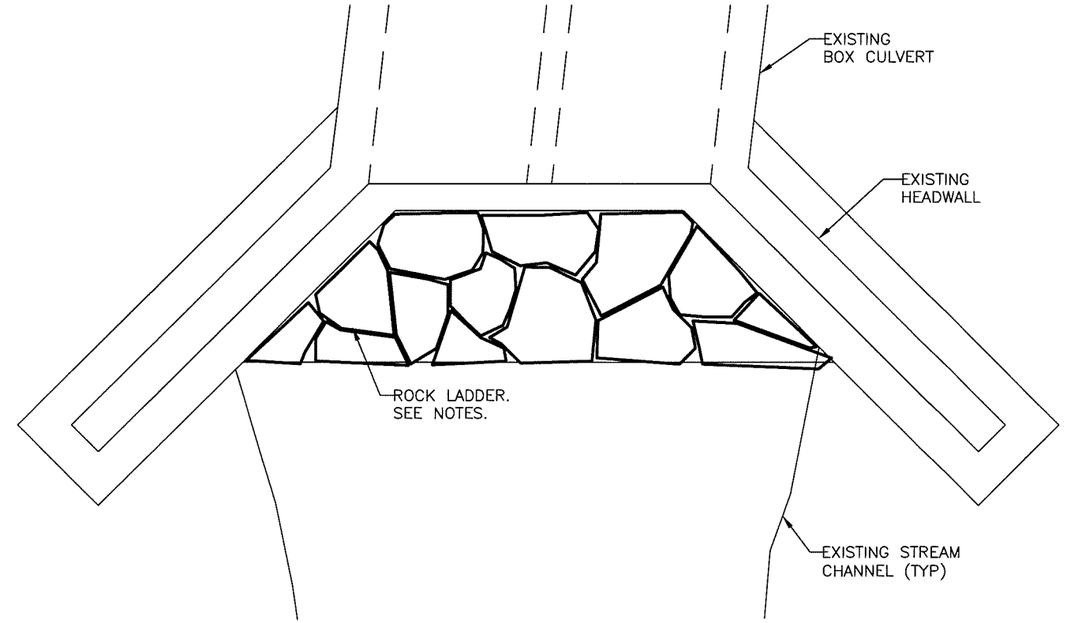

PLAN

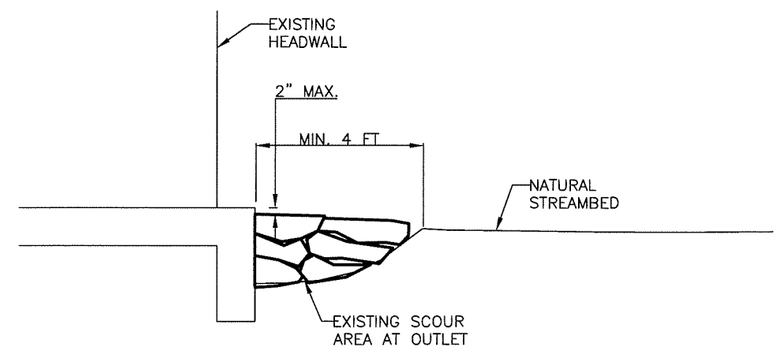

SECTION

NOTES:
1. ROCK LADDER SHALL BE CONSTRUCTED AT OUTLET OF EXISTING BOX CULVERT TO MINIMIZE EXISTING PERCHED CULVERT CONDITION AND FURTHER SCOURING.
2. ROCK FOR ROCK LADDER SHALL BE SIZED AS LARGE AS PRACTICAL AND PLACED IN EXISTING STREAM CHANNEL TO ALLOW FOR SMOOTH TRANSITION OF FLOW FROM BOX CULVERT OUTLET TO NATURAL STREAMBED DOWNSTREAM.
3. CONTRACTOR SHALL NOTIFY THE ENGINEER A MINIMUM OF 72 HOURS IN ADVANCE OF BEGINNING CONSTRUCTION OF THE ROCK LADDER.

ROCK LADDER

WILLIS ENGINEERS, 10700 SIKES PLACE, CHARLOTTE, NORTH CAROLINA, 28277 - NC LIC. NO. F-0114

NORTH CAROLINA PROFESSIONAL SEAL 24494 ENGINEER GREGORY J. WELLS
02 SEPT 11

IN CHARGE CAWjr DESIGNED CAWjr MADE BY AMA CHECKED GJW	2' 0 2' 4'	RECORD DRAWING TO THE BEST OF OUR KNOWLEDGE AND BELIEF THIS RECORD DRAWING SUBSTANTIALLY REPRESENTS THE PROJECT AS CONSTRUCTED	willis ENGINEERS	WATER AND SEWER AUTHORITY OF CABARRUS COUNTY WASTEWATER FACILITIES	MT. PLEASANT NORTHWEST SEWER EXTENSION GENERAL DETAILS	1968.005 39REC.DWG SEPTEMBER 2011	39

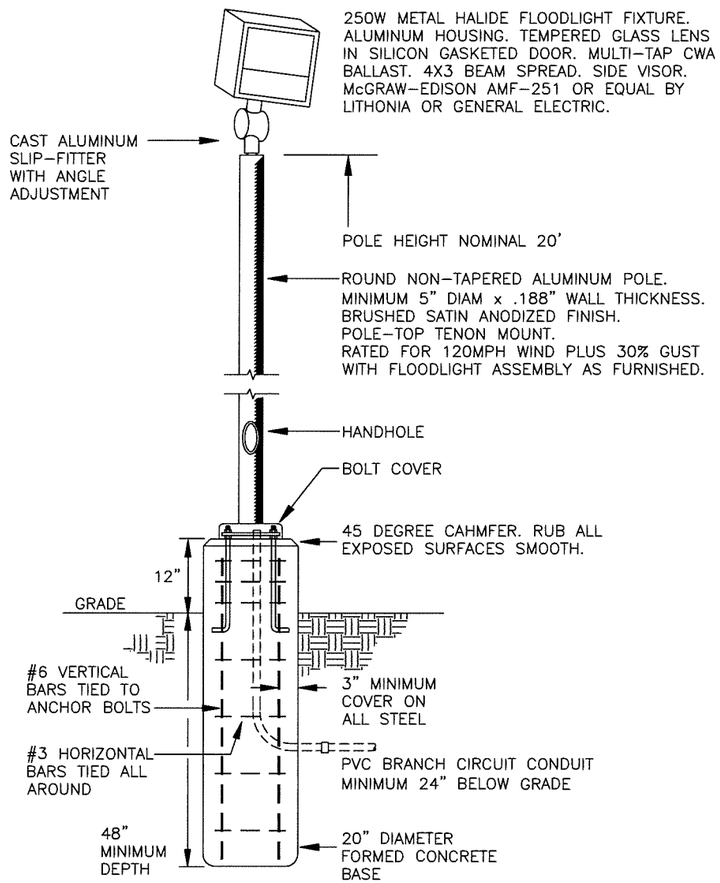

FLOODLIGHT DETAIL

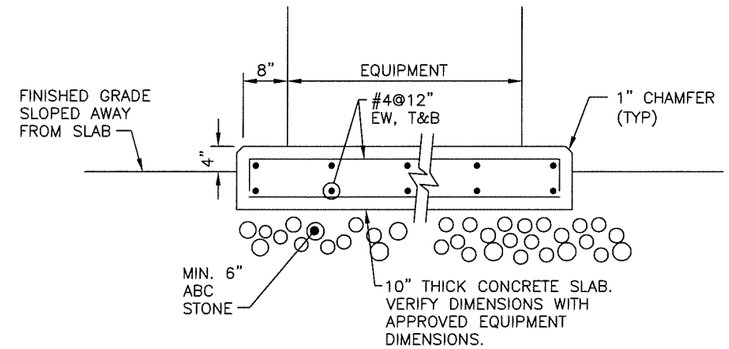

CONCRETE SLAB

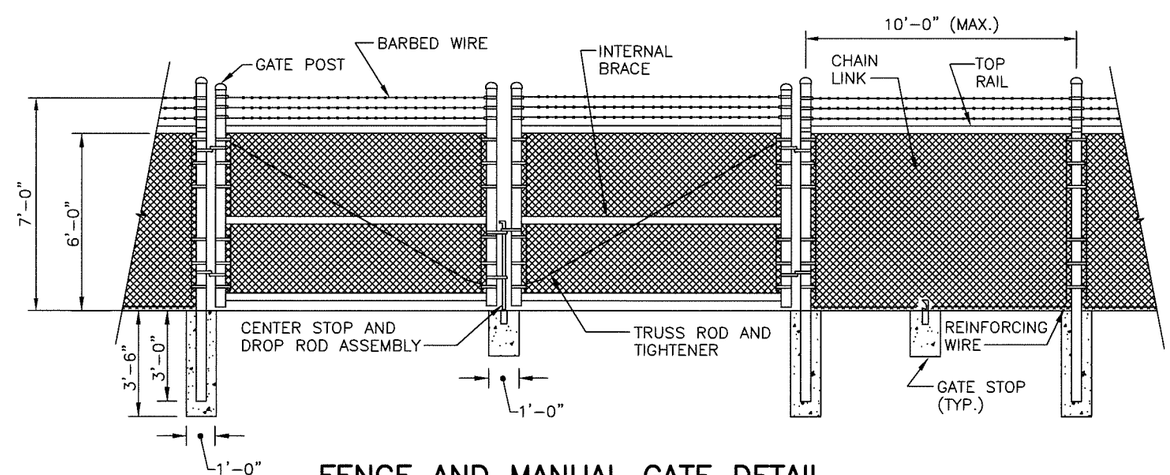

FENCE AND MANUAL GATE DETAIL

IN CHARGE CAWjr DESIGNED CAWjr MADE BY AMA CHECKED GJW	NO SCALE	RECORD DRAWING TO THE BEST OF OUR KNOWLEDGE AND BELIEF THIS RECORD DRAWING SUBSTANTIALLY REPRESENTS THE PROJECT AS CONSTRUCTED	willis ENGINEERS	WATER AND SEWER AUTHORITY OF CABARRUS COUNTY **WASTEWATER FACILITIES**	MT. PLEASANT NORTHWEST SEWER EXTENSION **GENERAL DETAILS**	1968.005 40REC.DWG SEPTEMBER 2011	**40**

WILLIS ENGINEERS, 10700 SIKES PLACE, CHARLOTTE, NORTH CAROLINA, 28277 - NC LIC. NO. F-0114

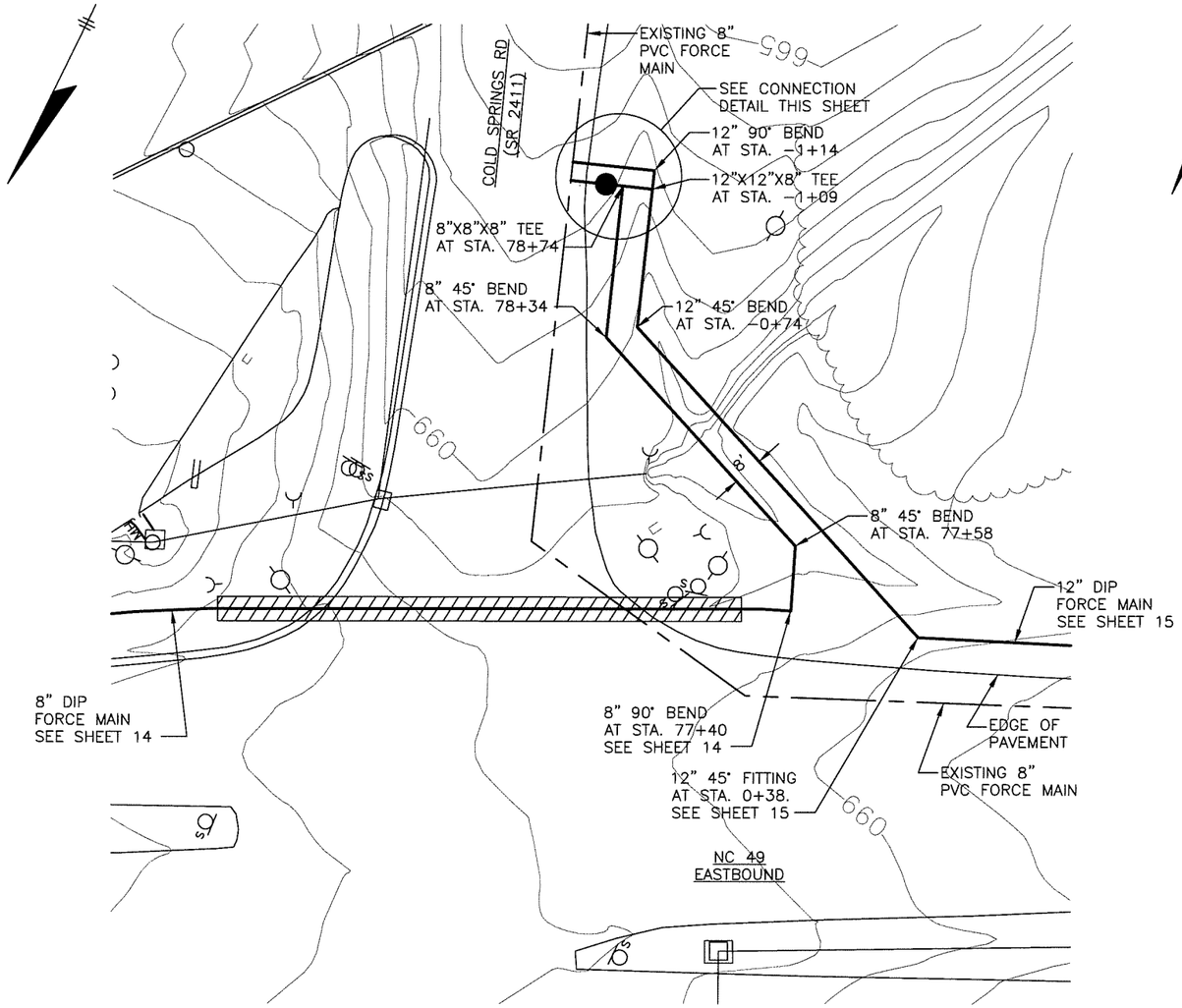

PLAN

NOTES:
1. ALL PIPING AND FITTINGS SHALL BE DIP WITH RESTRAINED JOINTS.
2. 12" FORCE MAIN SHALL HAVE NO HIGH POINTS FROM POINT OF CONNECTION AT EXISTING FORCE MAIN TO STA. 0+38.
3. 8" FORCE MAIN SHALL HAVE AN AIR RELEASE MANHOLE AT THE HIGH POINT AS SHOWN ON THE CONNECTION DETAIL. FORCE MAIN SHALL MAINTAIN POSITIVE SLOPE FROM STA. 77+40 TO AIR RELEASE MANHOLE.

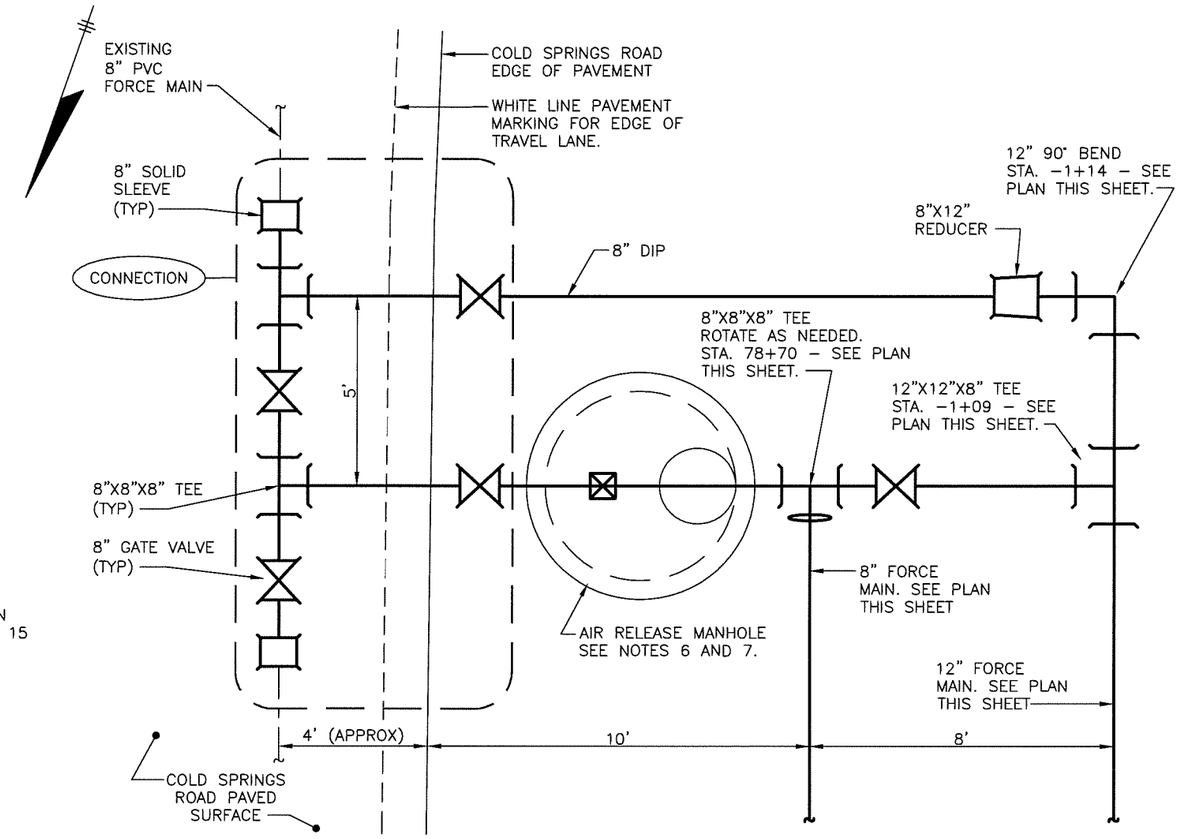

NOTES:
1. CONTRACTOR SHALL VERIFY LOCATION AND DEPTH OF EXISTING FORCE MAIN PRIOR TO BEGINNING WORK IN THIS AREA.
2. CONTRACTOR SHALL COORDINATE TEMPORARY INTERRUPTION OF SERVICE OF THE EXISTING FORCE MAIN WITH THE ENGINEER AND OWNER.
3. PRIOR TO INTERRUPTING EXISTING SERVICE, CONTRACTOR SHALL HAVE ALL COMPONENTS FOR THE CONNECTION ON SITE AND ASSEMBLED.
4. ALL PIPING AND FITTINGS SHOWN SHALL BE DIP WITH RESTRAINTED JOINTS.
5. EXISTING PAVED SURFACE SHALL BE RESTORED AS SCHEDULED ON NC 49 SECTION ON SHEET 37.
6. AIR RELEASE VALVE AND APPURTENANCES SHALL BE AS SHOWN ON AIR RELEASE MANHOLE DETAIL ON SHEET 38.
7. PRECAST STRUCTURE FOR AIR RELEASE MANHOLE SHALL BE 5 FT. DIA. RISER SECTION WITH KNOCKOUTS FOR PIPE PENETRATIONS SETTING ON MINIMUM OF 12" OF WASHED STONE. TOP SECTION SHALL BE FLAT SLAB TOP WITH CAST-IN FRAME AND COVER FLUSH WITH FINISHED GRADE.

CONNECTION DETAIL

NORTH CAROLINA PROFESSIONAL SEAL 24494 ENGINEER GREGORY J. WELLS

02 SEPT 11

IN CHARGE CAWjr DESIGNED CAWjr MADE BY AMA CHECKED GJW	20' 0 20' 40' 2' 0 2' 4'	RECORD DRAWING TO THE BEST OF OUR KNOWLEDGE AND BELIEF THIS RECORD DRAWING SUBSTANTIALLY REPRESENTS THE PROJECT AS CONSTRUCTED	willis ENGINEERS	WATER AND SEWER AUTHORITY OF CABARRUS COUNTY WASTEWATER FACILITIES	MT. PLEASANT NORTHWEST SEWER EXTENSION INTERCONNECTION	1968.005 41REC.DWG SEPTEMBER 2011	41

WILLIS ENGINEERS, 10700 SIKES PLACE, CHARLOTTE, NORTH CAROLINA, 28277 - NC LIC. NO. F-0114

(END OF EXHIBIT C)

Exhibit D
Performance Requirements
(Reference Only)

1.0 General

This Exhibit describes the anticipated Project Performance Requirements for the Progressive Design-Build Contract. These requirements are included for general information only and are not intended to require proposers to submit technical concepts or design solutions as part of the RFQ.

No preliminary design concept, or technical work product is requested or required during the RFQ phase. Performance requirements will be refined collaboratively during Phase 1 of the Progressive Design-Build Contract.

This Exhibit is intended solely for reference and transparency regarding anticipated Phase 1 and Phase 2 expectations following selection and award.

2.0 Project Intent

The intent of the Project is to replace roughly 23,700 feet of force main and 200 feet of gravity sewer with larger diameter lines along a revised alignment in Mt. Pleasant while maintaining full regulatory compliance, continuous sewer collection, and future expandability.

These performance-based requirements establish project outcomes only, and do not prescribe methods, means, or technical approaches.

3.0 Performance Outcomes

Upon completion of Phase 2 and commissioning, the Project shall:

1. Provide continuous wastewater collection and conveyance to accommodate additional future flow allocations and increased peak flow
2. To maintain acceptable force main velocities and other acceptable conditions in the force main and gravity sewer.
3. Maintain uninterrupted operations during construction.

6. Allow for future Pump Stations Upgrades and sewer interceptor line replacement without major reconstruction.

5.0 Reliability and Maintainability Objectives

The facility should be capable of operating in compliance with applicable regulatory requirements while maintaining collection system capabilities.

6.0 Operational Performance

Following commissioning, facilities must:

1. Maintain regulatory compliance under varying flow conditions
2. Support efficient operations and access for future maintenance and repairs as needed
3. Achieve reliable process performance consistent with validated design assumptions

7.0 Construction Sequencing Intent

The intent of the Project is to maintain continuous wastewater collection operation throughout construction.

Design-Builder will be required during Phase 1 to develop:

- Construction sequencing concepts
- Operational continuity strategies
- Commissioning and startup plans

No such information is required at RFQ stage.

8.0 Commissioning and Validation Intent

During Phase 1, the Design-Builder will prepare and validate technical concepts, equipment selection, commissioning plans, startup requirements, performance testing protocols, and long-term operational performance objectives.

No proposer response to commissioning approach is required at RFQ stage.

9.0 Innovation Objectives

Design-Builder may propose alternative means, methods, innovations, or process enhancements during Phase 1 that achieve equal or greater performance while reducing lifecycle cost or improving operational efficiency.

No proposer response to innovation concepts is required at RFQ stage.

10.0 Phase 1 Deliverables (anticipated)

During Phase 1, the following deliverables will be collaboratively developed:

- Basis of Design
- Design Development submittals
- Validation Report
- Commissioning plan
- Cost model
- Risk register
- Permitting strategy

Deliverables are informational at this stage and not for RFQ response.

(END OF EXHIBIT D)

Exhibit E
MBE Instructions – Affidavits A and B
(Reference Only)

MBE INSTRUCTIONS (AFFIDAVITS A & B)

MINORITY BUSINESS PARTICIPATION AFFIDAVITS (A & B), AND IDENTIFICAITON FORM (REQUIRED WITH INITIAL BID)

The Minority Business Participation goal established by under the Water and Sewer Authority of Cabarrus County (WSACC) Outreach Plan is 10%. This goal is applicable for all WSACC construction projects required to have verifiable percentage goals under G.S. 143-128.2(a).

In accordance with Section 143-128.2, General Statutes of North Carolina, all bidders are required to provide information relative to minority business enterprises that will be used as construction subcontractors, vendors, suppliers or providers of professional services for the proposed project. This information must be provided with the bid by completing the "Identification of Minority Business Participation" form that is included with the Bid documents. The total dollar value of the Bid that is to be performed by Minority business contracting must also be included on the form.

Also included with the bid documents is Affidavit A and Affidavit B. Each bidder must complete Affidavit A (Listing of Good Faith Efforts) that outlines the good faith efforts made to comply with the minority business participation requirements for the proposed project. If a bidder intends to perform 100% of the Work with its own forces, then Affidavit B (intent to Perform Contract With Own Workforce) must be completed and submitted instead of Affidavit A.

Requirements for MBE participation is outlined in the "Special Conditions" part of the front-end of these contract documents. Bidder is instructed to read this information carefully prior to completing and submitting the bid.

Please note that submittal and proper completion of the required minority business participation forms must be provided in order for the bid to be considered responsive.

(END OF EXHIBIT E)

Exhibit F
Affidavit A - Listing of Good Faith Efforts
(Reference Only)

Identification of Minority Business Participation

State of North Carolina AFFIDAVIT A – Listing of Good Faith Efforts

County of Cabarrus

Affidavit of (Name of Bidder)_____

I have made a good faith effort to comply under the following areas checked:

Bidders must earn at least 50 points from the good faith efforts listed for their bid to be considered responsive. (1 NC Administrative Code 30 I.0101)

- ☐ **1 – (10 pts)** Contacted minority businesses that reasonably could have been expected to submit a quote and that were known to the contractor, or available on State or local government maintained lists, at least 10 days before the bid date and notified them of the nature and scope of the work to be performed.
- ☐ **2 --(10 pts)** Made the construction plans, specifications and requirements available for review by prospective minority businesses, or providing these documents to them at least 10 days before the bids are due.
- ☐ **3 – (15 pts)** Broken down or combined elements of work into economically feasible units to facilitate minority participation.
- ☐ **4 – (10 pts)** Worked with minority trade, community, or contractor organizations identified by the Office of Historically Underutilized Businesses and included in the bid documents that provide assistance in recruitment of minority businesses.
- ☐ **5 – (10 pts)** Attended prebid meetings scheduled by the public owner.
- ☐ **6 – (20 pts)** Provided assistance in getting required bonding or insurance or provided alternatives to bonding or insurance for subcontractors.
- ☐ **7 – (15 pts)** Negotiated in good faith with interested minority businesses and did not reject them as unqualified without sound reasons based on their capabilities. Any rejection of a minority business based on lack of qualification should have the reasons documented in writing.
- ☐ **8 – (25 pts)** Provided assistance to an otherwise qualified minority business in need of equipment, loan capital, lines of credit, or joint pay agreements to secure loans, supplies, or letters of credit, including waiving credit that is ordinarily required. Assisted minority businesses in obtaining the same unit pricing with the bidder's suppliers in order to help minority businesses in establishing credit.
- ☐ **9 – (20 pts)** Negotiated joint venture and partnership arrangements with minority businesses in order to increase opportunities for minority business participation on a public construction or repair project when possible.
- ☐ **10 - (20 pts)** Provided quick pay agreements and policies to enable minority contractors and suppliers to meet cash-flow demands.

The undersigned, if apparent low bidder, will enter into a formal agreement with the firms listed in the Identification of Minority Business Participation schedule conditional upon scope of contract to be executed with the Owner. Substitution of contractors must be in accordance with GS143-128.2(d) Failure to abide by this statutory provision will constitute a breach of the contract.

The undersigned hereby certifies that he or she has read the terms of the minority business commitment and is authorized to bind the bidder to the commitment herein set forth.

Date:_____ Name of Authorized Officer:_____

Signature:_____

Title:_____

SEAL

State of North Carolina, County of_____

Subscribed and sworn to before me this _____day of _____20_____

Notary Public_____

My commission expires _____

(END OF EXHIBIT F)

Exhibit G
Affidavit B - Intent to Perform Contract with Own Workforce
(Reference Only)

Identification of Minority Business Participation

State of North Carolina --AFFIDAVIT B-- Intent to Perform Contract with Own Workforce.

County of Cabarrus

Affidavit of_____
(Name of Bidder)

I hereby certify that it is our intent to perform 100% of the work required for the _____

_____

contract.
(Name of Project)

In making this certification, the Bidder states that the Bidder does not customarily subcontract elements of this type project, and normally performs and has the capability to perform and will perform all elements of the work on this project with his/her own current work forces; and

The Bidder agrees to provide any additional information or documentation requested by the owner in support of the above statement.

The undersigned hereby certifies that he or she has read this certification and is authorized to bind the Bidder to the commitments herein contained.

Date:_____Name of Authorized Officer:_____

Signature:_____

Title:_____

SEAL

State of North Carolina, County of _____

Subscribed and sworn to before me this _____day of _____20___

Notary Public _____

My commission expires_____

(END OF EXHIBIT G)

Exhibit H
Identification of Minority Business Participation Form
(Reference Only)

Identification of Minority Business Participation

I,_____,
(Name of Bidder)
do hereby certify that on this project, we will use the following minority business enterprises as construction subcontractors, vendors, suppliers or providers of professional services.

Firm Name, Address and Phone #	Work type	*Minority Category

*Minority categories: Black, African American (**B**), Hispanic (**H**), Asian American (**A**) American Indian (**I**), Female (**F**) Socially and Economically Disadvantaged (**D**)

The total value of minority business contracting will be ($)_____.

(END OF EXHIBIT H)

Exhibit I
MBE Instructions – Affidavits C and D
(Reference Only)

MBE INSTRUCTIONS (AFFIDAVITS C & D)

MINORITY BUSINESS PARTICIPATION AFFIDAVITS (C & D) (REQUIRED BY THE APPARENT LOW BIDDER)

Within 72 hours of notification of being the apparent lowest responsible, responsive bidder (time period can be extended by owner if determined to be appropriate), Bidder shall file either Affidavit C or Affidavit D as follows:

If the portion of the Work for the proposed project to be performed by minority business enterprises equals 10% or more of the total contract price, then Affidavit C must be completed and submitted by the Bidder. This affidavit shall give rise to the presumption that the Bidder has made the required good faith effort.

If the portion of the Work for the proposed project to be performed by minority business enterprises is less than 10% of the total contract price, then Affidavit D must be completed and submitted by the Bidder. The document must be supplemented by evidence of all good faith efforts that were implemented, including advertisements, solicitations, and other specific actions taken demonstrating recruitment and selection of minority business enterprises for participation in the contract.

If Affidavit "B" (self-performance of work) was submitted with bid, then sufficient information must be provided to demonstrate that the bidder does not customarily subcontract on this type of project.

Requirements for MBE participation is outlined in the "Special Conditions" part front-end of these contract documents. Bidder is instructed to read this information carefully prior to completing and submitting the bid.

Following contract award, the contractor will be required to provide a finalized listing of the minority business enterprises that will be participating in the project.

Please note that submittal and proper completion of the required minority business participation forms must be provided in order for the bid to be considered responsive.

(END OF EXHIBIT I)

Exhibit J
Affidavit C – Portion of Work to be Performed by Minority Firms
(Reference Only)

State of North Carolina - AFFIDAVIT C - Portion of the Work to be Performed by Minority Firms

County of _____

(Note this form is to be submitted only by the apparent lowest responsible, responsive bidder.)

If the portion of the work to be executed by minority businesses as defined in GS143-128.2(g) is equal to or greater than 10% of the bidders total contract price, then the bidder must complete this affidavit. This affidavit shall be provided by the apparent lowest responsible, responsive bidder within **72 hours** after notification of being low bidder.

Affidavit of _____I do hereby certify that on the
(Name of Bidder)

_____
(Project Name)

Project ID#_____Amount of Bid $_____

I will expend a minimum of _____% of the total dollar amount of the contract with minority business enterprises. Minority businesses will be employed as construction subcontractors, vendors, suppliers or providers of professional services. Such work will be subcontracted to the following firms listed below.

Attach additional sheets if required

Name and Phone Number	*Minority Category	Work description	Dollar Value

*Minority categories: Black, African American (**B**), Hispanic (**H**), Asian American (**A**) American Indian (**I**), Female (**F**) Socially and Economically Disadvantaged (**D**)

Pursuant to GS143-128.2(d), the undersigned will enter into a formal agreement with Minority Firms for work listed in this schedule conditional upon execution of a contract with the Owner. Failure to fulfill this commitment may constitute a breach of the contract.

The undersigned hereby certifies that he or she has read the terms of this commitment and is authorized to bind the bidder to the commitment herein set forth.

Date:_____Name of Authorized Officer:_____

Signature:_____

Title:_____

SEAL

State of North Carolina, County of _____

Subscribed and sworn to before me this _____day of _____20_____

Notary Public_____

My commission expires_____

(END OF EXHIBIT J)

Exhibit K
Affidavit D – Good Faith Efforts
(Reference Only)

State of North Carolina AFFIDAVIT D – Good Faith Efforts

County of _____

If the goal of 10% participation by minority business **is not** achieved, the Bidder shall provide the following documentation to the Owner of his good faith efforts:

(Name of Bidder)

Affidavit of: _____

I do certify the attached documentation as true and accurate representation of my good faith efforts.

(Attach additional sheets if required)

Name and Phone Number	*Minority Category	Work description	Dollar Value

*Minority categories: Black, African American (**B**), Hispanic (**H**), Asian American (**A**) American Indian (**I**), Female (**F**) Socially and Economically Disadvantaged (**D**)

Documentation of the Bidder's good faith efforts to meet the goals set forth in these provisions. Examples of documentation include, but are not limited to, the following evidence:

A. Copies of solicitations for quotes to at least three (3) minority business firms from the source list provided by the State for each subcontract to be let under this contract (if 3 or more firms are shown on the source list). Each solicitation shall contain a specific description of the work to be subcontracted, location where bid documents can be reviewed, representative of the Prime Bidder to contact, and location, date and time when quotes must be received.

B. Copies of quotes or responses received from each firm responding to the solicitation.

C. A telephone log of follow-up calls to each firm sent a solicitation.

D. For subcontracts where a minority business firm is not considered the lowest responsible sub-bidder, copies of quotes received from all firms submitting quotes for that particular subcontract.

E. Documentation of any contacts or correspondence to minority business, community, or contractor organizations in an attempt to meet the goal.

F. Copy of pre-bid roster.

G. Letter documenting efforts to provide assistance in obtaining required bonding or insurance for minority business.

H. Letter detailing reasons for rejection of minority business due to lack of qualification.

I. Letter documenting proposed assistance offered to minority business in need of equipment, loan capital, lines of credit, or joint pay agreements to secure loans, supplies, or letter of credit, including waiving credit that is ordinarily required.

Failure to provide the documentation as listed in these provisions may result in rejection of the bid and award to the next lowest responsible and responsive bidder.

Date:_____ Name of Authorized Officer:_____

Signature:_____

Title:_____

SEAL

State of North Carolina, County of _____

Subscribed and sworn to before me this _____day of _____20_____

Notary Public_____

(END OF EXHIBIT K)